fabuwood®

CABINETRY

Allure

Specifications Guide / Valid thru August 2022

Please Note: Items are subject to change without prior notice. This spec book is missing some updated information, so to stay up to date with product specifications and modification options please use our new digital spec book which can be found at https://ezpricing.fabuwood.com/specbook

Construction Specifications

Doors and Drawer Fronts:
Doors and drawer fronts in the Allure line are made of solid wood stiles and rails joined together using mortise and tenon joints with an MDF center panel to reduce the possibility of shrinkage and is the preferred material for painted finishes.

Hinges:
All Allure door styles come standard with Blum Compact Clip Concealed Hinges and feature Quick-Release Technology with Blumotion Soft-close. Hinges are six-way adjustable and open at 110°.

Please note: Lazy Susan, Easy Reach, and Pie Cut cabinets do not feature the soft-close mechanism.

Drawers:
The Allure line includes a 5/8″ thick solid wood dovetail drawer box with a 3/8″ plywood bottom attached to Tandem plus Blumotion full extension soft-closing concealed drawer runners. Interior drawer height is 3″.

Shelving:
18mm (¾″) thick select veneered plywood with matching wood veneer edge banding is used on all wall, tall, and base cabinetry where applicable. The adjustable shelves are supported by metal shelf clips. All standard depth base cabinetry includes an 18″ deep adjustable shelf, wall cabinetry 10 5/8″ deep adjustable shelves, and tall cabinetry 21″ deep adjustable shelves.

Cabinet Sides, Backs, Tops and Bottoms:
½″ thick veneered plywood with natural finished interiors, dovetailed side panels engineered to create a solid integrated cabinet box. Backs are stapled and screwed into place for additional support.

Face Frame:
¾″ x 1½″ solid wood stiles and rails jointed with glue and dowels. Back of face frames are dovetail grooved to accept side panels. The face frame is engineered so that the bottoms of all base and wall cabinets are flushed with the top inside edge of the face frame creating a custom look.

Toe Kick:
Base and tall cabinets are constructed with ¾″ x 4½″ unfinished plywood toe kick. Additional 8-foot lengths of ¼″ toe kicks are available in matching color to our cabinetry.

Panel Beams:
A 2 ½″ x ½″ plywood panel beam is fastened into a dovetail groove at the top of each base cabinet to ensure a straight fully integrated side, and for use of support and mounting of a countertop.

Construction Specifications

1. Solid wood door and drawer front frames are mortise and tenon.
2. Compact Clip Hinges with Quick-Release technology. Includes Blumotion soft-close mechanism integrated in six-way adjustable hinges. Hinges open at 110°
3. ⅝″ solid wood dovetail drawer with a ⅜″ plywood bottom features Tandem plus Blumotion full extension concealed drawer runners.
4. 3″ interior drawer height.
5. ¾″ x 1½″ solid wood face frame.
6. ½″ veneered plywood back with a natural finished interior.
7. ½″ unfinished plywood side panels dovetailed into face frame.
8. 18mm (¾″) veneered plywood adjustable shelving with matching wood veneer edge banding.
9. ¾″ x 4½″ unfinished plywood toe kick attached to cabinet. Matching ¼″ Toe Kick cover to be ordered separately.
10. 2½″ x ½″ plywood panel beams dovetailed into the side panels for strength and stability.
11. Base cabinet has 18″ deep shelf.
12. When placing an order, need to select exposed sides; Right, Left or Both. A ¼" select medium-density fiberboard panel will be applied to the selected side(s), and the side will be near flush finished.
13. Doors and drawers are full overlay

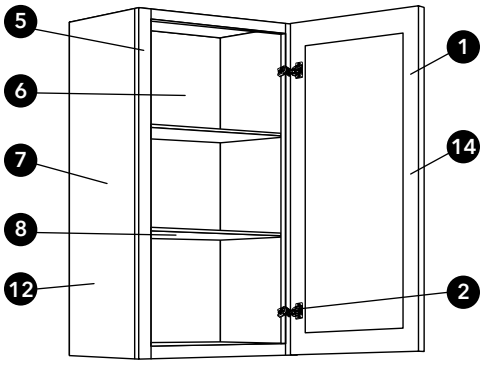

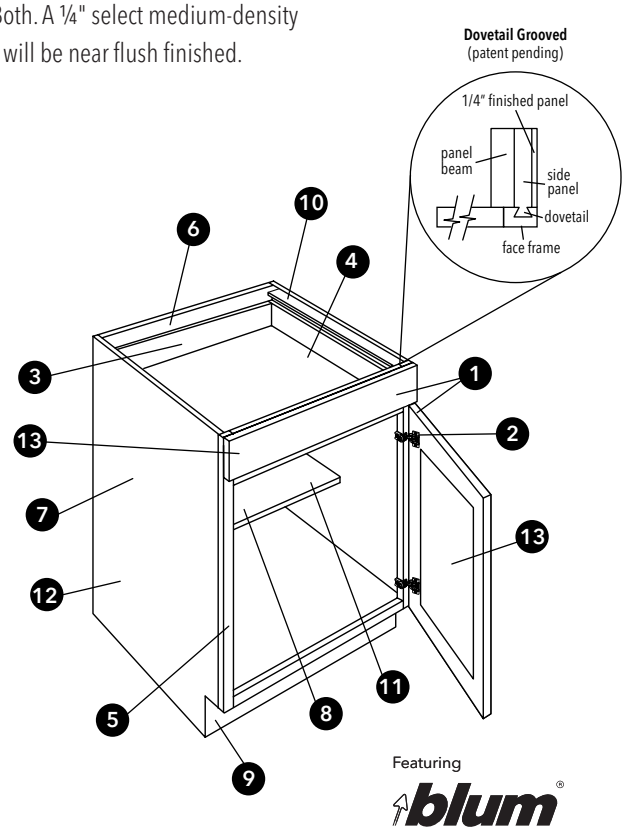

What exactly defines a Q12 cabinet?

To fully achieve Q12 eligibility, a cabinet must encompass twelve unique standards of quality. Read below to learn more about the twelve fundamental pillars that establish the Q12 qualification:

Q1: QUALITY SOURCED LUMBER

This Q12 standard requires the use of carefully selected top-grade lumber, guaranteeing the finest and most dependable kitchen cabinets. To meet this requirement, Fabuwood has implemented a rigorous inspection process to assure that only first-class products, free of irregularities leave the plant.

Q2: PRO TOUCH TECHNIQUES

To fully permeate a Q12 assessment, expert finishing methods are required to heavily influence first impressions and assure a lasting finish that is easy to maintain. Fabuwood's own pro touch technique uses renowned brands to create a durable, simple to clean cabinet that will hold its beauty for years.

Q3: DOVETAIL CONSTRUCTION

Another important facet of Q12 is the required use of dovetail construction. A process that involves plywood side panels to perfectly interlock with a solid wood face frame through corresponding dovetail grooves. This highly resilient technique that Fabuwood introduced to the market guarantees that Q12 cabinet lines are secure, strong, and long-lasting.

Q4: ANTI-WARP STRUCTURES

The anti-warp component involves the use of plywood panels comprised of rigid reinforcement beams. By applying the beams with a dovetail construction technique to secure all components, Fabuwood meets this standard ensuring a strong, reliable build that is resistant to distortion.

Q5: METAL SHELF CLIPS

To maintain a maximum level of stability that preserves a shelf's longevity, these metal shelf clips assure sturdiness and durability. With this feature your shelves are sure to stand the test of time.

Q6: SOLID BACK BUILDS

For superior structural longevity, this Q12 feature requires that the back of a cabinet is constructed from one piece of solid half-inch plywood. Fabuwood fulfills this standard by manufacturing cabinet backs with a strong and single piece of plywood to ensure durable strength and dimensional stability.

Q7: FLUSH FIT FRAMES

In order to be considered Q12 compliant, a cabinet must have flush inner frames that provide an attractive appearance while giving added dimension to the internal area. Fabuwood's Q12 lines display prime craftsmanship with their flat surface top and bottom interior planes that result in convenient and practical usage.

Q8: FINISHED INTERIORS

Treated and finished cabinet interiors are another significant feature of Q12 as they produce a clear statement of quality and attention to detail. As opposed to manufacturing with an applied lining, Fabuwood's vigorous top treatment techniques create a refined and durable design that is free of bubbling, peeling and chipping.

Q9: SOFT-CLOSING ACTION

Another great characteristic of the Q12 qualification is the use of compact hinges with built-in, soft-close mechanism. Fabuwood uses the smooth-running capability and soft closing action of Blum's tandem plus blumotion hinges, providing an impeccably gentle and fluid cabinet function.

Q10: FLUID FULL-EXTENSION

Cabinets built with smooth full-extension glides guarantee an enhanced running action that maximizes a cabinet's storage to its full capacity and ensures Q12 eligibility. Fabuwood manufactures Q12 cabinets with Blum's tandem plus runners and soft-closing technology, precisely utilizing space while also preventing damage and depreciation.

Q11: EZ LEVEL DRAWER FRONTS

To ensure proper door alignment and function, a Q12 cabinet requires an effortless system utilizing a degree of mechanical precision for installing perfectly positioned drawer faces. Fabuwood innovates with a unique technique using circular discs that allow for easy 3/8" adjustments in any direction, resulting in a Q12 cabinet that achieves an aesthetically graceful balance.

Q12: SEALED SIGNATURE

The final Q12 metric requires a thorough review at each manufacturing stage to ensure the completed product meets the provisions specified in the quality assurance system. Upon factory exit, a stamp of approval is given to show Fabuwood's commitment to quality control from the very first level of Q1 to the final Q12 stage, thus guaranteeing a superior and immaculate end product.

5 Year Limited Warranty

COVERAGE OF WARRANTY

Fabuwood Cabinetry Corp ("Fabuwood") is pleased to provide the following limited warranty on all cabinets imported to and assembled and sold in the United States by Fabuwood. This warranty does not cover cabinets sold or shipped outside of the United States. This limited warranty is subject to all limitations, exclusions, disclaimers and procedures set forth herein. Fabuwood warrants to the original purchasing consumer that all cabinets purchased from Fabuwood will be free from all unnatural defects in material and workmanship in accordance with the Fabuwood quality standards sheet under normal residential use for 5 years from the date of the original purchase or as long as the original purchasing consumer owns the home in which such cabinets are installed, whichever is less. This warranty is non transferable to subsequent owners of the home.

EXCLUSIONS

THIS WARRANTY SUPERSEDES ANY AND ALL PREVIOUS WARRANTIES BY FABUWOOD AND CONSTITUTES THE EXCLUSIVE REMEDY AGAINST FABUWOOD FOR ALL DEFECTS, DAMAGES AND WORKMANSHIP. THERE ARE NO IMPLIED WARRANTIES EXTENDING BEYOND THE TERMS OF THIS WARRANTY. FABUWOOD SHALL NOT BE LIABLE FOR ANY INDIRECT, SPECIAL, PUNITIVE, INCIDENTAL OR CONSEQUENTIAL COSTS, EXPENSES OR DAMAGES. THIS WARRANTY GIVES YOU SPECIFIC LEGAL RIGHTS, AND YOU MAY ALSO HAVE OTHER RIGHTS, WHICH VARY FROM STATE TO STATE. IT IS POSSIBLE THAT ONE OR MORE OF THE LIMITATIONS AND EXCLUSIONS IN THIS WARRANTY MAY NOT APPLY TO YOU. THIS WARRANTY APPLIES ONLY TO FABUWOOD PRODUCTS PURCHASED ON OR AFTER MARCH 15, 2014

LIMITATIONS

This warranty shall become void if the cabinets, cabinetwork, drawer slides or hinges are modified from its original form, improperly installed or damaged prior to or during the installation, or used in any way other than for residential purposes. This warranty covers only parts and materials of the cabinets as supplied by Fabuwood. This warranty does not cover any products used or installed in connection with cabinets, such as gas or electric appliances, countertops, or plumbing fixtures. This warranty does not apply to products installed in locations that do not maintain year-round environmental controls. This warranty shall not apply to damages caused by transportation, storage, dirt, chemicals, exposure to moisture, humidity or excessive heat or cold, nor does it cover defects arising from normal wear and tear, misuse, neglect, accidents, alterations, improper use or failure to maintain properly, house settling, or acts of God. No installer, retailer, distributor, agent or employee of Fabuwood has the authority to alter the obligations or limitations in this warranty.

QUALITY STANDARDS

This warranty covers all damages and unnatural defects that are deemed as such under the current Fabuwood Quality Standards sheet. The current Fabuwood Quality Standards sheet is available for download in the dealer login section of the Fabuwood website (www.fabuwood.com), which should be reviewed at each time a claim for warranty service is being considered. Fabuwood reserves the right to modify or change the Fabuwood Quality Standards sheet at any time without notice.

DISCLAIMERS

The following is a brief recap of some of the characteristics of the wood and finishes on the cabinets you are about to purchase. Please read them carefully. If some of these characteristics concern you, please choose something else. We bring these characteristics to your attention so you will realize that Fabuwood will not be held responsible for these variations in your cabinetry. It is important to note that wood products claimed as defective are most often the result of atmospheric conditions such as excess moisture and humidity. Fabuwood strongly recommends testing the intended location of the products for such conditions prior to installation.

WOOD AND COLOR VARIATIONS: Wood is a product of nature, and since no two trees are alike, cabinets may vary in color, texture and grain. Wood characteristics naturally occurring such as variations in color, grain, mineral streaks, pinholes and knots are not considered defects. Color variations in cabinets are also a natural occurrence due to species, age, character of cabinets, and exposure to UV light and sunlight. For these reasons, new and/or replacement cabinets may not match display samples and/or existing cabinets. This may result in overall color variations, but is not considered a defect.

WOOD DOORS: Wood by nature will undergo expansion and contraction movements year after year as it compensates and adjusts to ever changing atmospheric humidity and temperature conditions. It is very common for center panels on doors to shrink, expand or move during these transitions. Typically, the panel will return to its normal position within a year once it has adjusted to seasonal changes. It is for these same reasons that it is very common for doors to warp during these periods. Doors that are warped up to ¼" are not considered defective. Note: It is advisable to check if the door was properly installed, since doors that appear warped are very often the result of improper installation.

PAINTED FINISHES: Plywood is a non-porous, smooth grained wood. Additionally, wood by nature undergoes periods of expansion and contraction while it adjusts to atmospheric conditions mentioned above. As such, finish stress lines may become visible on painted cabinets especially at the joints. Any such occurrence is not considered a defect.

GLAZED FINISHES: A glazed finish by character is an uneven finish. Some edges and profiles will have heavier hang up than others and glazing may vary cabinet to cabinet, door to drawer and item to item. This may result in overall color variations but is not considered a defect.

WARRANTY PERFORMANCE

If a defect does occur within the terms and conditions of this warranty such defective part will be repaired or replaced by Fabuwood at its sole discretion. Fabuwood will not provide or pay for the cost of removal of defective product, transportation of defective, repaired or replaced product or installation of repaired or replaced product. Fabuwood will not be responsible for any shipping damages to the defective, replaced or repaired product. If defective item has been discontinued or is not available at the time, Fabuwood reserves the right to replace the item with the most similar item available in Fabuwood's inventory at that time. Fabuwood cannot guarantee that the finish of any replacement will exactly match the finish and appearance of the defective item due to the natural aging process of the wood and finishes of the cabinets. Fabuwood may require at its discretion that the customer submit a clear photo, or that a company representative view the item being claimed before honoring this warranty.

CLAIMS

To submit a claim covered under this warranty, the original proof of purchase and full payment or copies thereof must be provided. Please email all documents to customerservice@fabuwood.com. Your dealer will contact you once your claim has been reviewed.

NOTE

Please do not send back any items to Fabuwood prior to receiving proper authorization from customer service. Fabuwood takes no responsibility on any items sent back to Fabuwood without proper return authorization.

Door Styles

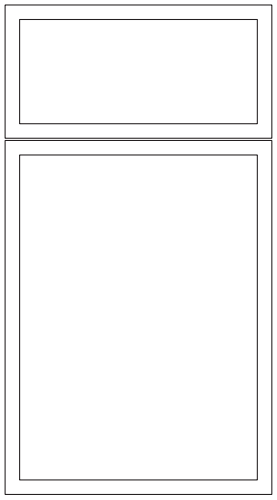

LUNA

	COLOR	FINISH	PRICE COLUMN
NEW! →	Dove	Paint	H / K
NEW! →	Kona	Stain	H / K

- *Full Overlay door Door / drawer stiles and rails are 3/4" wide*
- *Constructed with mortise and tenon joints*
- *Doors and Drawer fronts in the Luna door style are made with either Solid Wood Stiles & Rails (Stained Finishes) or HDF Stiles & Rails (Painted Finishes) and joined with a ⅝" thick Moisture-Resistant MDF/veneer center panel to reduce the possibility of shrinkage.*
- *5-piece recessed panel drawer front matches door design and detail.*
- *Blum Compact Clip Concealed Hinges with Quick-Release Technology and Blumotion Soft-close (Blum Model# 31C3355B.20)*
- *Tandem plus Blumotion full extension concealed drawer runners (Blum Model #563H)*

* ***KONA DISCLAIMER:***
Due to the nature of wood, Kona cabinets may vary in color.

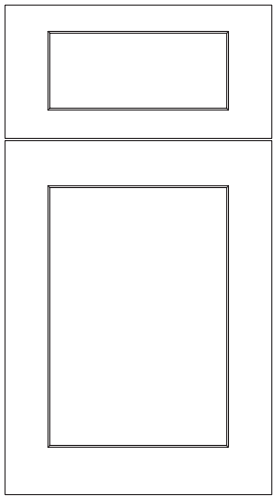

GALAXY

	COLOR	FINISH	PRICE COLUMN
	Frost	Paint	I
	Linen	Paint	I
	Nickel	Paint	I
NEW! →	Indigo	Paint	I
	Espresso	Stain	I
	Horizon*	Stain	I
	Cobblestone	Stain	I

- *Full overlay door*
- *Stiles and rails are ¾" thick and 2½" wide*
- *Constructed with mortise and tenon joints*
- *Doors consist of 3/8" thick recessed MDF/veneer center panel*
- *5-piece drawer fronts are 1/2" thick recessed MDF/veneer center panel that match door design and detail*
- *Blum Compact Clip Concealed Hinges with Quick-Release Technology and Blumotion Soft-close (Blum Model# 31C3355B.20)*
- *Tandem plus Blumotion full extension concealed drawer runners (Blum Model #563H)*

* ***HORIZON DISCLAIMER:***
Due to the nature of wood and the complex finish used to generate Horizon, these cabinets may vary in color.

Door Styles

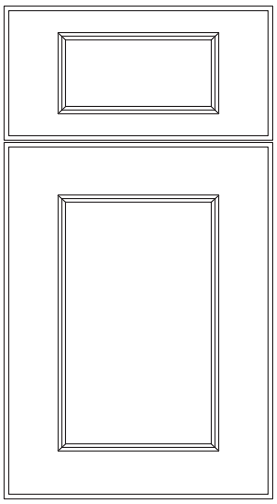

FUSION

	COLOR	FINISH	PRICE COLUMN
	Blanc	Paint + Glaze	H / K
	Nickel	Paint	H / K
	Dove	Paint	H / K
NEW! →	Stone	Paint	H / K
NEW! →	Oyster	Paint	H / K
NEW! →	Kona*	Stain	H / K

- *Full overlay door*
- *Stiles and rails are ¾" thick and 3" wide*
- *Constructed with mortise and tenon joints*
- *3/8" thick reversed MDF / veneer center panel*
- *5-piece recessed panel drawer front matches door design and detail.*
- *Blum Compact Clip Concealed Hinges with Quick-Release Technology and Blumotion Soft-close (Blum Model# 31C3355B.20)*
- *Tandem plus Blumotion full extension concealed drawer runners (Blum Model #563H)*

* ***KONA DISCLAIMER:***
Due to the nature of wood, Kona cabinets may vary in color.

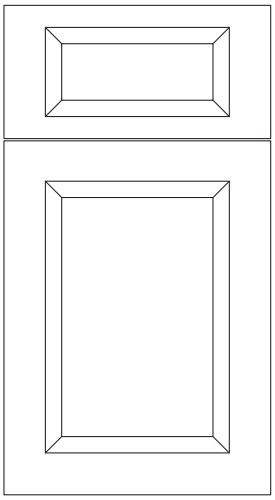

ONYX

COLOR	FINISH	PRICE COLUMN
Frost	Paint	H / K
Horizon*	Stain	H / K
Cobblestone	Stain	H / K

- *Full overlay door*
- *Stiles and rails are ¾" thick and 3" wide*
- *Constructed with mortise and tenon joints*
- *3/8" thick reversed MDF / veneer center panel*
- *5-piece recessed panel drawer front matches door design and detail*
- *Blum Compact Clip Concealed Hinges with Quick-Release Technology and Blumotion Soft-close (Blum Model# 31C3355B.20)*
- *Tandem plus Blumotion full extension concealed drawer runners (Blum Model #563H)*

* ***HORIZON DISCLAIMER:***
Due to the nature of wood and the complex finish used to generate Horizon, these cabinets may vary in color.

Door Styles

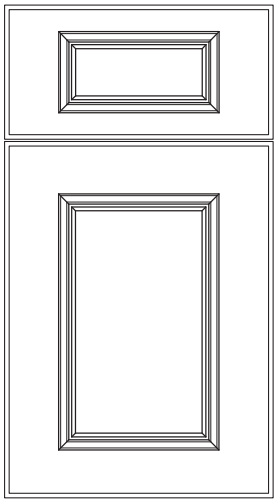

IMPERIO

COLOR	FINISH	PRICE COLUMN
Dove	Paint	H / K
Nickel	Paint	H / K

- *Full overlay door*
- *Frames are solid wood ¾" thick and 3" wide*
- *Constructed with mortise and tenon joints*
- *MDF center panel is ⅝" thick*
- *An **applied moulding** is added to the inside edge of the door frame*
- *5 piece recessed panel drawer front matches door design and moulding detail*
- ***Cabinet installed next to a wall or deeper cabinet requires a ¼" filler for full door opening***
- *Blum Compact Clip Concealed Hinges with Quick-Release Technology and Blumotion Soft-close (Blum Model# 31C3355B.20)*
- *Tandem plus Blumotion full extension concealed drawer runners (Blum Model #563H)*

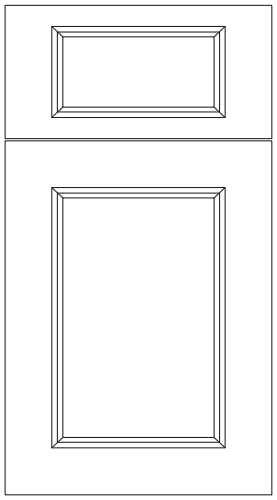

NEXUS

COLOR	FINISH	PRICE COLUMN
Frost	Paint	H / K
DISCONTINUING → Slate	Paint	H / K

- *Full overlay door*
- *Stiles and rails are ¾" thick and 3¼" wide*
- *Constructed with mortise and tenon joints*
- *⅜" thick reversed MDF center panel*
- *5-piece recessed panel drawer front matches door design and detail.*
- *Blum Compact Clip Concealed Hinges with Quick-Release Technology and Blumotion Soft-close (Blum Model# 31C3355B.20)*
- *Tandem plus Blumotion full extension concealed drawer runners (Blum Model #563H)*

Sales Tools

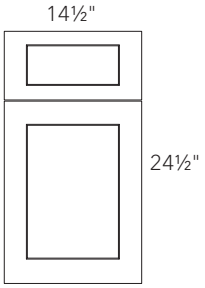

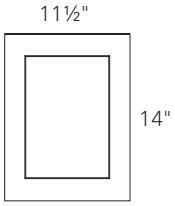

DOOR SAMPLES WITH DRAWER FRONT

ITEM	DESCRIPTION	NET PRICE
SDNF	NEXUS FROST	30
SDGF	GALAXY FROST	30
SDGL	GALAXY LINEN	30
SDGN	GALAXY NICKEL	30
SDGI	GALAXY INDIGO	30
SDGE	GALAXY ESPRESSO	30
SDGH	GALAXY HORIZON	30
SDGC	GALAXY COBBLESTONE	30
SDFB	FUSION BLANC	30
SDFN	FUSION NICKEL	30
SDFD	FUSION DOVE	30
SDFO	FUSION OYSTER	30
SDFS	FUSION STONE	30
SDFK	FUSION KONA	30
SDOF	ONYX FROST	30
SDOH	ONYX HORIZON	30
SDOC	ONYX COBBLESTONE	30
SDID	IMPERIO DOVE	30
SDIN	IMPERIO NICKEL	30
SDIK	IMPERIO KONA	30
SDLD	LUNA DOVE	30
SDLK	LUNA KONA	30

SMALL DOOR SAMPLES

ITEM	DESCRIPTION	NET PRICE
SDGF-2	GALAXY FROST	23
SDGL-2	GALAXY LINEN	23
SDGN-2	GALAXY NICKEL	23
SDGI-2	GALAXY INDIGO	23
SDGE-2	GALAXY ESPRESSO	23
SDGH-2	GALAXY HORIZON	23
SDGC-2	GALAXY COBBLESTONE	23
SDFB-2	FUSION BLANC	23
SDFN-2	FUSION NICKEL	23
SDFD-2	FUSION DOVE	23
SDFK-2	FUSION OYSTER	23
SDFO-2	FUSION STONE	23
SDFD-2	FUSION KONA	23
SDOF-2	ONYX FROST	23
SDOH-2	ONYX HORIZON	23
SDOC-2	ONYX COBBLESTONE	23
SDID-2	IMPERIO DOVE	23
SDIN-2	IMPERIO NICKEL	23
SDIK-2	IMPERIO KONA	23
SDLD-2	LUNA DOVE	23
SDLK-2	LUNA KONA	23

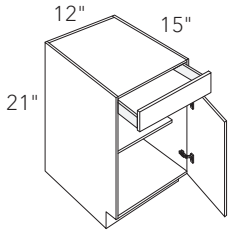

MINI BASE SAMPLE

ITEM	DESCRIPTION	NET PRICE
GF MBS	BASE SAMPLE 12"W X 21"H X 15"D	115

- *Available in Allure Galaxy Frost, and Quest Metro Mist finish only.*

Sales Tools

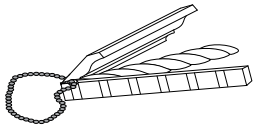

MOLDING CHAIN

ITEM	DESCRIPTION	NET PRICE
MLK-ALLURE	COMPLETE CHAIN OF ALLURE MOLDINGS	46

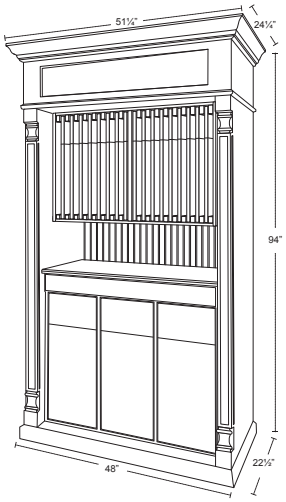

SELLING CENTER

ITEM	DESCRIPTION	NET PRICE
DEALER SELLING CENTER	FABUWOOD SELLING CENTER	1700

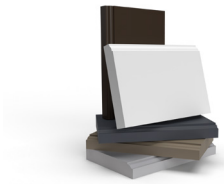

COLOR BLOCKS

ITEM	DESCRIPTION	NET PRICE
COLOR BLOCK	BOX OF COLOR BLOCKS	35

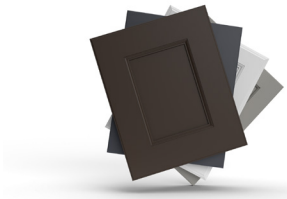

SAMPLE PACKAGES

ITEM	DESCRIPTION	NET PRICE
SMALL SAMPLE PACKAGE	SMALL SAMPLE PACKAGE	570
DEALER PACKAGE	LITERATURE AND ACCESSORIES	795

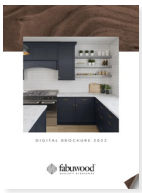

DIGITAL BROCHURE

ITEM	DESCRIPTION	NET PRICE
DIGITAL BROCHURE QR	QR CODE KEY RING	23

STYLE GUIDE

ITEM	DESCRIPTION	NET PRICE
SG22	25PK. 2022 STYLE GUIDE BROCHURE	60

Modifications

CUT ITEMS

ITEM	DESCRIPTION	LIST
CUT-BASE	Reduce depth of base cabinet (min. depth 12")	370
CUT-DBASE	Reduce depth of drawer base cabinet (min. depth 12")	510
CUT-SBASE	Reduce depth of sink base cabinet (no min.)	245
CUT-WALL	Reduce depth of wall cabinet (no min.)	310
CUT-TALL	Reduce depth of tall cabinet (no min.)	710
CUT-DOOR*	Cut out center panel of door for glass insert (per door, glass not included)	210
CUT-COLUMN	Reduce depth of column (specify depth)	265
CUT-BASE HEIGHT	Reduce height of base cabinet by cutting off top drawer (total base height: 28⅛")	310
CUT-TK	Reduce toe kick height (no min.)	120
CUT-PANEL	Cut down a panel to any size	83/pc.
CUT-ROD	Reduce depth of rollout drawer (specify depth of cabinet)	125
CUT-KD30	Reduce depth of knee drawer cabinet (specify depth of cabinet)	260

* *Not available for Luna*

PIPE CHASE

ITEM	DESCRIPTION	LIST
CHASE-BASE	Make chase in base cabinet	605
CHASE-DBASE	Make chase in drawer base cabinet	875
CHASE-WALL	Make chase in wall cabinet	325
CHASE-TALL	Make chase in tall cabinet	910
CHASE-CORNER	Make chase in corner cabinet (WDC, WPC & ERB only)	1205

Must supply a drawing for all chase modifications.

CUSTOMIZATIONS

ITEM	DESCRIPTION	LIST
CREATE-ERB	Remove tray,install bottom panel on top,to create easy reach	185
CREATE-RETURN WALL*	Create a return wall filler up to 6"W x 15"D x 42"H (materials incl.)	470
CREATE-RETURN TALL*	Create a return tall filler up to 6"W x 30"D x 96"H (materials incl.)	865
CREATE-COLUMN BASE*	Create a 3" column up to 30"D by 34½"H	805
CREATE-COLUMN TALL*	Create an oversized column	1455
CREATE-COLUMN WALL*	Create a 3" column up to 15"D x 42"H	605
HAMPER	Install door mounted pull out wood hamper in cabinet (cabinet not incl.)	710
INSTALL-ACCES	Install any accessory in a cabinet (accessories not incl.)	Quote*
CUSTOM DOOR**	Order any custom size door	Quote*

* *Email orders@fabuwood.com for quote*
** *Not available for Luna Kona*

Modifications

MODIFICATIONS

ITEM	DESCRIPTION	LIST
REMOVE-DRAWER	Remove cabinet drawer to create false drawer front	63
CLOSE-BLIND	Close open section of a blind wall or base cabinet	103
ATTACH-TK	Attach toe kick on wall cabinet	120
RECESS-TK	Recess toe kick of base cabinet (must supply a drawing)	210
EDGE-BAND	Additional edge banding (price per linear foot)	10
PEN-CABINET	Create a peninsula cabinet from 2 cabinets (cabinets not incl.)	415
INCREASE-BASE	Increase depth on base cabinet	135
INCREASE-WALL	Increase depth on wall cabinet	135
INCREASE-TALL	Increase depth on tall cabinet	135
MATCH-INTERIOR	Stain interior of cabinet to match exterior	67
CREATE- SQ BOTTOM	Square bottom shelf for wall open end to enable light rail molding	103
FLUSH-WALL BOTTOM	Flush the bottom of a wall cabinet	310
FLUSH-TOE KICK	Flush toe kick of base cabinet to face frame (sides not finished)	185
FULL-DOORS	Create full height door base cabinet from 2 cabinets (cabinets not incl.)	125
OE6	Cut OE12 to 6"	0

**** Email orders@fabuwood.com for quote***

UPGRADES

ITEM	DESCRIPTION	LIST
GLAZE	Custom glazes available for a charge	20%
FINISHING	Refinish from stock Fabuwood paint color to another stock paint color.*	35%
CUSTOM COLOR PAINT	Refinish to custom color paint.*	35%
FINISHING SURCHARGE	Custom Color Set-Up Fee	$300
FINISHING - RFD	Refinish third party accessory to a stock or custom color paint**	Quote◊

**** Refer to Dealer Policies and Procedures for full details.***
***** Available for painted finishes only. Restrictions may apply. Dealer may request to have a 3rd party item refinished to stock color.***
◊ Email orders@fabuwood.com for quote

LOOSE PARTS

ITEM	DESCRIPTION	LIST
SHELF BASE	Loose 24″ deep shelf (specify cabinet size)	
SHELF WALL	Loose 12″ deep shelf (specify cabinet size)	
SHELF TALL	Loose 24″ deep shelf (specify cabinet size)	
SHELF-DSB	Loose shelf (specify cabinet size)	315
SK BASE	Skin for base cabinet with adhesion	83
SK MC	Skin for microwave wall cabinet with adhesion	66
SK TALL	Skin for tall cabinet with adhesion	220
SK W30	Skin for 30" high wall cabinet with adhesion	66
SK W36	Skin for 36" high wall cabinet with adhesion	66
SK W42	Skin for 42" high wall cabinet with adhesion	66
SK WD	Skin for wall with drawer cabinet with adhesion	220

Many more modifications available- please contact your customer service rep.

12″- 27″ High Wall Cabinets

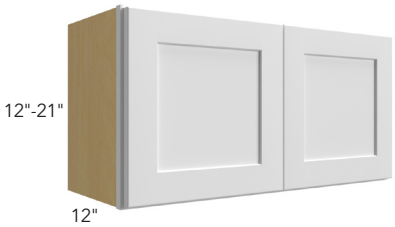

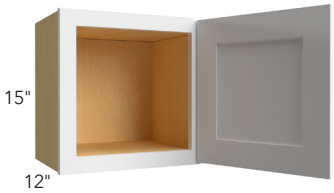

* *single door cabinet*

12"- 21" HIGH

ITEM	I	H / K
W3012	310	380
W3312	320	390
W3612	335	415
W1215*	225	270
W1515*	235	285
W1815*	265	330
W2115*	300	360
W2415	305	370
W2715	310	375
W3015	320	390
W3315	335	415
W3615	350	425
W2418	330	415
W3018	335	415
W3318	350	425
W3618	360	440
W3021**	360	470

*** Has 1 shelf*

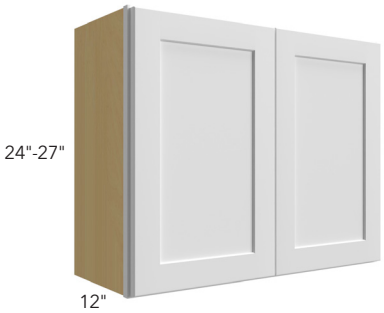

24"- 27" HIGH DOUBLE DOOR

ITEM	I	H / K
W2424	360	440
W3024	420	510
W3324	450	555
W3624	470	580
W3027*		

* *Discontinued items are available in limited quantities while supplies last.*

12″- 24″ High & 24″ Deep Wall Cabinets

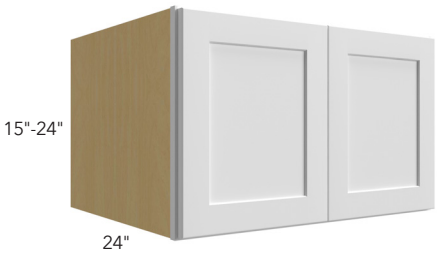

24" DEEP

ITEM	I	H / K
W301524	465	570
W301824	490	600
W302424*	665	820
W331224	605	720
W331524	615	730
W331824	625	750
W332424*	725	875
W361224	490	600
W361524	535	655
W361824	555	675
W362424*	770	940

* *Has 1 shelf*

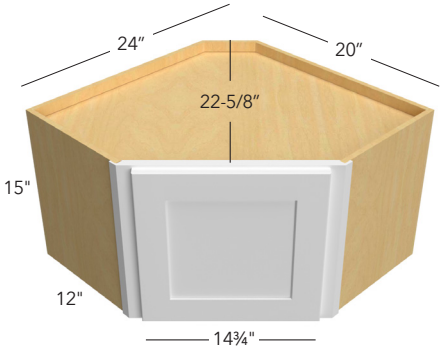

DIAGONAL CORNER

ITEM	I	H / K
WDC2415	455	565

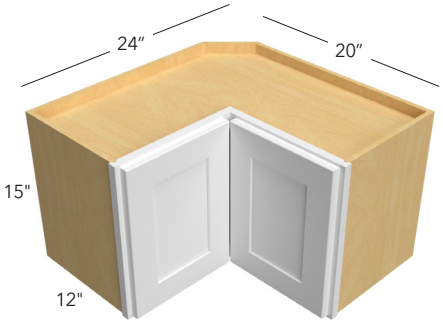

PIE CUT CORNER

ITEM	I	H / K
WPC2415	540	665

- *Soft close hinge not available*

30" High Wall Cabinets

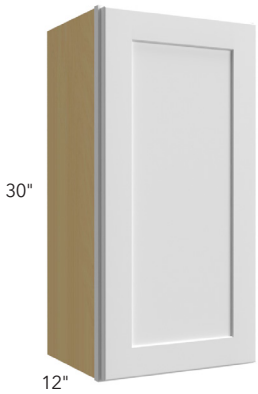

SINGLE DOOR

ITEM	I	H / K
W0930	270	335
W1230	300	365
W1530	310	380
W1830	360	440
W2130	390	485

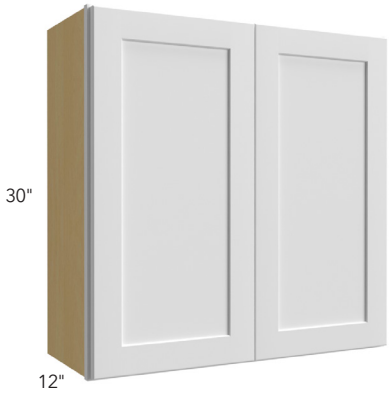

DOUBLE DOOR

ITEM	I	H / K
W2430	480	585
W2730	500	615
W3030	510	625
W3330	535	655
W3630	560	685
W3930*	700	855

* *Has 1½" center stile*

SINGLE DOOR BLIND

ITEM	I	H / K
WBC2430	470	580
WBC3030	510	760
WBC3630	535	850

- *Must use filler on adjacent side (not supplied)*
- *Dimensions are rounded off to closest 1/8"*

	Act.	Max	Door	Stile	Open (door side)
WBC2430	24"	27"	9½"	7"	7"
WBC3030	30"	33"	14¾"	7¾"	12¼"
WBC3630	36"	39"	21½"	7"	19"

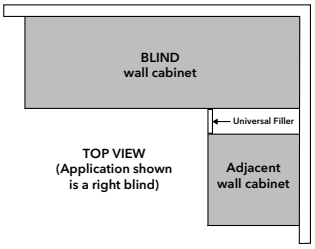

30" High Wall Cabinets

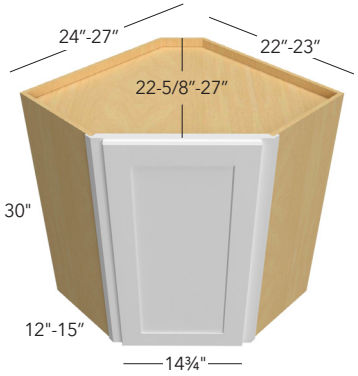

DIAGONAL CORNER

ITEM	I	H / K
WDC2430	605	740
WDC2730*	715	885

* *Cabinet exposed sides come pre-finished with near-flush finished ends.*

- *For Lazy Susan see accessories on page 43*

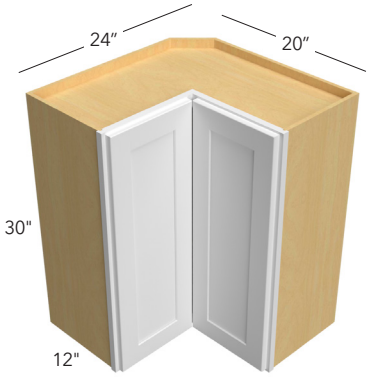

PIE CUT CORNER

ITEM	I	H / K
WPC2430	720	890

- *Soft close hinge not available*

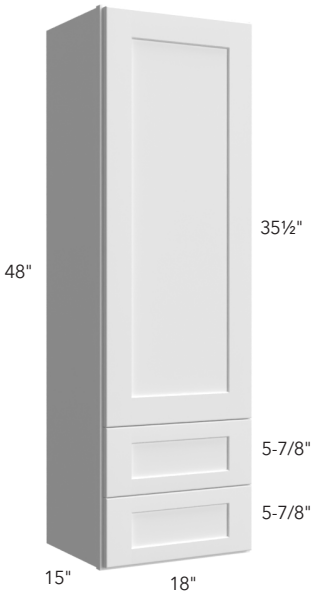

WALL WITH DRAWERS

ITEM	I	H / K
WD1848	1065	1305

- *Cabinet exposed sides come pre-finished with near-flush finished ends.*

36" High Wall Cabinets

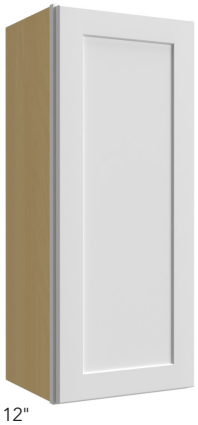

SINGLE DOOR

ITEM	I	H / K
W0936	320	390
W1236	355	435
W1536	370	450
W1836	420	510
W2136	465	575

DOUBLE DOOR

ITEM	I	H / K
W2436	570	700
W2736	590	725
W3036	600	740
W3336	655	800
W3636	695	845
W3936*	760	930

* *Has 1½" center stile*

SINGLE DOOR BLIND

ITEM	I	H / K
WBC2436	570	695
WBC3036	600	835
WBC3636	620	915

- *Must use filler on adjacent side (not supplied)*
- *Dimensions are rounded off to closest ⅛"*

	Act.	Max	Door	Stile	Open (door side)
WBC2436	24"	27"	9½"	7"	7"
WBC3036	30"	33"	14¾"	7¾"	12¼"
WBC3636	36"	39"	21½"	7"	19"

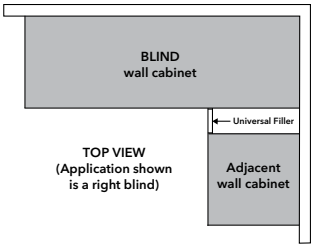

36" High Wall Cabinets

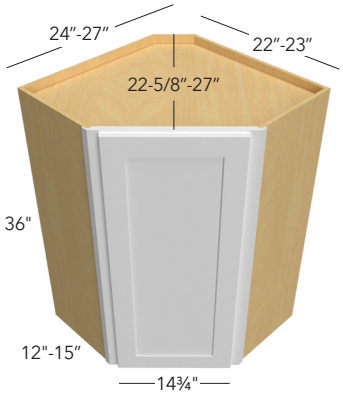

DIAGONAL CORNER

ITEM	I	H / K
WDC2436	685	795
WDC2736*	810	945

* *Cabinet exposed sides come pre-finished with near-flush finished ends.*

- *For Lazy Susan see accessories on page 43*

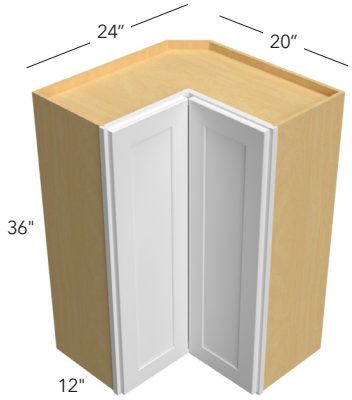

PIE CUT CORNER

ITEM	I	H / K
WPC2436	845	1040

- *Soft close hinge not available*

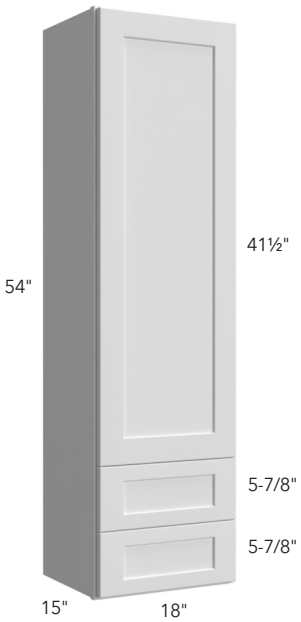

WALL WITH DRAWERS

ITEM	I	H / K
WD1854	1170	1435

- *Cabinet exposed sides come pre-finished with near-flush finished ends.*

42" High Wall Cabinets

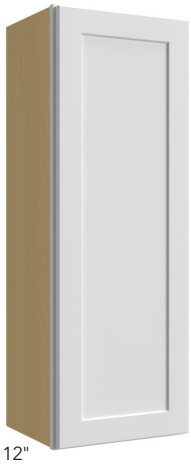

SINGLE DOOR

ITEM	I	H / K
W0942	370	450
W1242	400	495
W1542	430	525
W1842	470	580
W2142	550	670

DOUBLE DOOR

ITEM	I	H / K
W2442	625	775
W2742	690	840
W3042	700	855
W3342	770	940
W3642	830	1020
W3942*	965	1180

* *Has 1½" center stile*

SINGLE DOOR BLIND

ITEM	I	H / K
WBC2442	665	810
WBC3042	695	960
WBC3642	710	1045

- *Must use filler on adjacent side (not supplied)*
- *Dimensions are rounded off to closest ⅛"*

	Act.	Max	Door	Stile	Open (door side)
WBC2442	24"	27"	9½"	7"	7"
WBC3042	30"	33"	14¾"	7¾"	12¼"
WBC3642	36"	39"	21½"	7"	19"

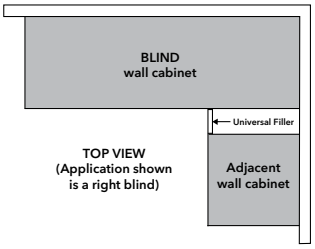

42" High Wall Cabinets

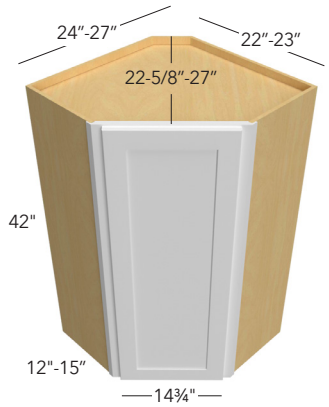

DIAGONAL CORNER

ITEM	I	H / K
WDC2442	775	945
WDC2742*	910	1120

* *Cabinet exposed sides come pre-finished with near-flush finished ends.*

- *For Lazy Susan see accessories on page 43*

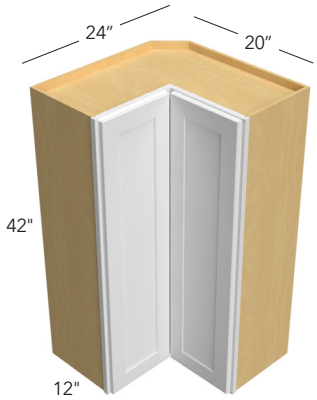

PIE CUT CORNER

ITEM	I	H / K
WPC2442	970	1190

- *Soft close hinge not available*

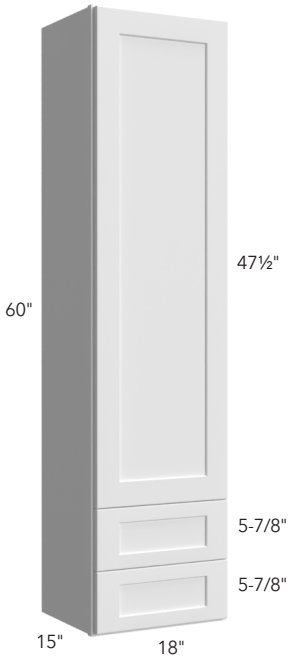

WALL WITH DRAWERS

ITEM	I	H / K
WD1860	1240	1515

- *Cabinet exposed sides come pre-finished with near-flush finished ends.*

Specialty Wall Cabinets

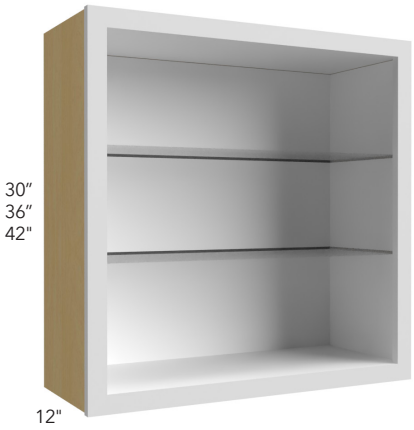

NO DOOR

ITEM	I	H / K
NDW1530	435	435
NDW1536	510	510
NDW1542	590	590
NDW1830	485	485
NDW1836	560	560
NDW1842	625	625
NDW2430	605	605
NDW2436	645	645
NDW2442	675	675
NDW3030	615	615
NDW3036	720	720
NDW3042	830	830
NDW3630	625	625
NDW3636	805	805
NDW3642	990	990

- *Door not included in price. Designed to use with glass doors. See glass doors listed on pg. 10*
- *Has hinges installed*
- *Cabinet comes pre-drilled for hinges. Fabuwood can fill up hinge holes for additional charge.*
- *Finished interior to match color of frame*
- *Adjustable ¼″ thick tempered glass shelves*
- *Increased or decreased depth cabinets will come with matching interior wood shelves instead of glass shelves.*

* *Has three shelves*

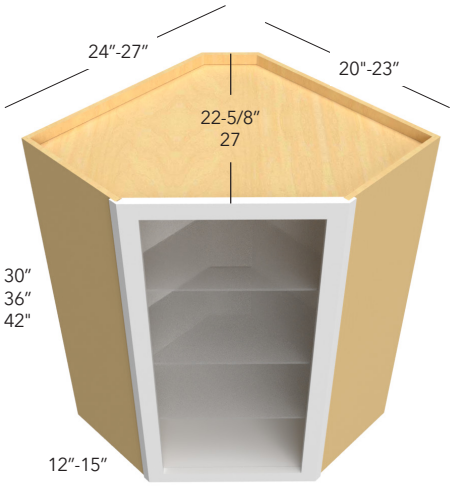

DIAGONAL CORNER NO DOOR

ITEM	I	H / K
NDWDC2430	1010	1010
NDWDC2436	1190	1190
NDWDC2442*	1255	1255

- *Door not included. Designed to use with glass doors. See glass doors listed on pg. #10*
- *Cabinet comes pre-drilled for hinges. Fabuwood can fill up hinge holes for additional charge.*
- *Finished interior*
- *Adjustable ¼″ thick tempered glass shelves*
- *Increased or decreased depth cabinets will come with matching interior wood shelves instead of glass shelves.*

* *Has three shelves*

Glass Doors

29½"
35½"
41½"
47½"

GLASS DOOR (CLEAR GLASS ONLY)

ITEM	I	H / K
GDW1530	125	160
GDW1536	155	190
GDW1542	180	220
GDW1830	155	185
GDW1836	180	220
GDW1842	210	245
GDW2430**	107	130
GDW2436**	130	160
GDW2442**	155	185
GDW3030**	130	160
GDW3036**	155	190
GDW3042**	180	220
GDW3630**	155	185
GDW3636**	180	225
GDW3642**	210	250
GDWD1860	245	300
GDWDC2430*	130	160
GDWDC2436*	155	190
GDWDC2442*	180	220

- *Glass doors are pre-installed with clear glass only.*

* *14 ¾" wide*

** *Cost is for a single door, need to order quantity of 2 doors per cabinet*

Doors Prepped for Glass

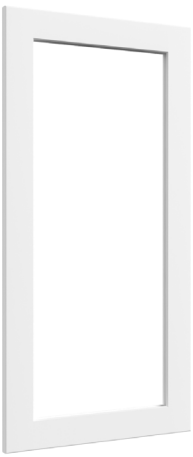

29½"
35½"
41½"
47½"

DOOR PREPPED FOR GLASS

ITEM	I	H / K
DFG1530	105	130
DFG1536	125	160
DFG1542	150	180
DFG1830	125	155
DFG1836	150	180
DFG1842	170	210
DFG2430**	90	110
DFG2436**	107	130
DFG2442**	125	155
DFG3030**	106	130
DFG3036**	125	160
DFG3042**	150	180
DFG3630**	125	155
DFG3636**	150	185
DFG3642**	170	215
DFGWD1860	210	250

- *Glass not included*
- *Comes with the center panel removed; vinyl gasket is included for easy installation of glass in the field.*

** *Cost is for a single door, need to order quantity of 2 doors per cabinet*

Specialty Wall Cabinets

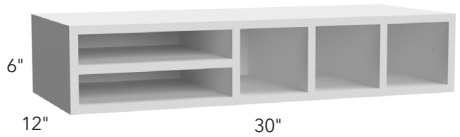

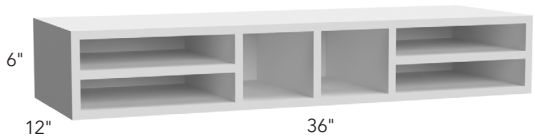

WALL ORGANIZER

ITEM	I	H / K
WO306	360	360
WO366	405	405

- *Veneer plywood with edge banding*
- *Finished Interior & Exterior*

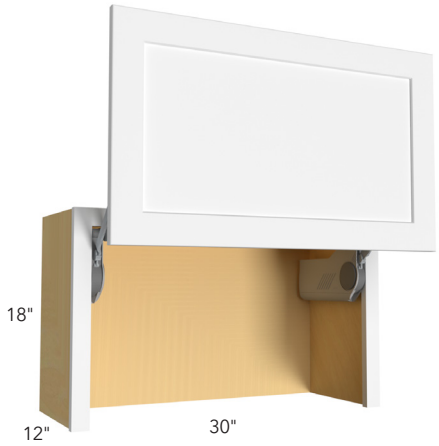

WALL APPLIANCE

ITEM	I	H / K
WAC3018	1065	1175

Specialty Wall Cabinets

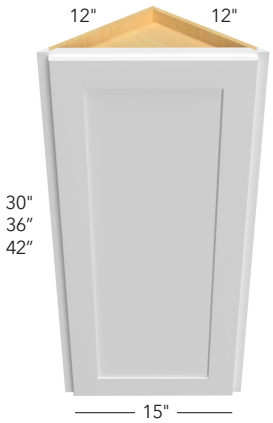

ANGLE END

ITEM	I	H / K
WAE1230	365	445
WAE1236*	420	505
WAE1242*	480	580

- *Can use glass door from diagonal corner wall cabinet. Requires 1" overlay hinges*
- *Adjustable shelves*

* *Has three shelves*

OPEN END

ITEM	I	H / K
OE1230	480	480
OE1236	565	565
OE1242*	605	605

- *Comes as 12" (Fabuwood will cut to 6" at no charge)*

* *Has three shelves*

* *For Square Bottom Shelf, see modifications on pg. VII*

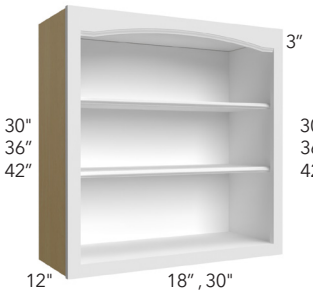

NEXUS

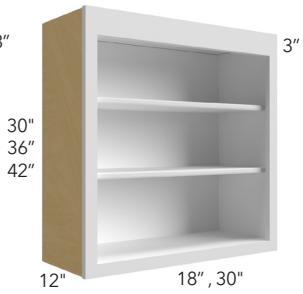

LUNA, GALAXY, FUSION, ONYX & IMPERIO

OPEN SHELF

ITEM	I	H / K
WOS1830	530	530
WOS1836*	595	595
WOS1842*	670	670
WOS3030	750	750
WOS3036*	895	895
WOS3042*	1010	1010

* *Has three shelves*

- *Finished interior*
- *NEXUS: Arch valance*
- *Top rail & shelf frontmatches door profile*
- *Adjustable shelves*
- *Increased depth cabinets will not have edge profile*

Edge on shelves:

NEXUS **LUNA GALAXY ONYX** **FUSION** **IMPERIO**

Microwave Wall Cabinets

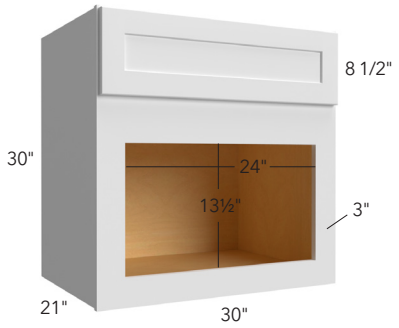

30" MICROWAVE

ITEM	I	H / K
MC303021	760	930

- *Cabinet exposed sides come pre-finished with near-flush finished ends.*
- *3" Wide rails face frame to be trimmed on site*
- *Minimum Width opening 24"*
- *Maximum **cut out** width 28½"*
- *Minimum Height opening 13"*
- *Maximum **cut out** height is 19"*
- *Maximum **overall** trim kit height 21"*
- *Lift-up door*

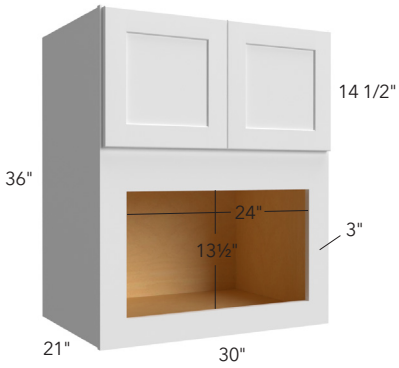

36" MICROWAVE

ITEM	I	H / K
MC303621	945	1170

- *Cabinet exposed sides come pre-finished with near-flush finished ends.*
- *3" Wide rails face frame to be trimmed on site*
- *Minimum width opening 24"*
- *Maximum **cut out** width 28½"*
- *Minimum Height opening 13"*
- *Maximum **cut out** height is 19"*
- *Maximum **overall** trim kit height 21"*

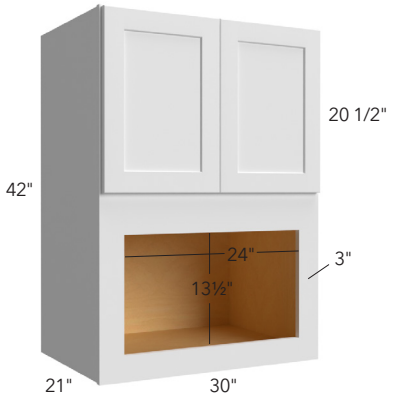

42" MICROWAVE

ITEM	I	H / K
MC304221	1035	1265

- *Cabinet exposed sides come pre-finished with near-flush finished ends.*
- *3" Wide rails face frame to be trimmed on site*
- *Minimum Width opening 24"*
- *Maximum **cut out** width 28½"*
- *Minimum Height opening 13"*
- *Maximum **cut out** height is 19"*
- *Maximum **overall** trim kit height 21"*

Wine Cabinets

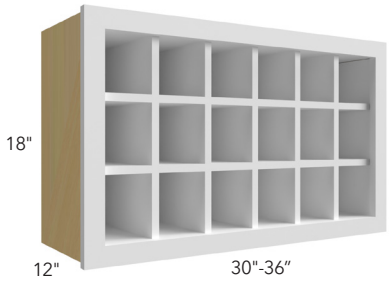

WINE RACK

ITEM	I	H / K
WR3018*	765	765
WR3618**	830	830

- *Finished interior*
- *1-½" Framed cabinet construction*

* *Fits 18 bottles*
** *Fits 21 bottles*

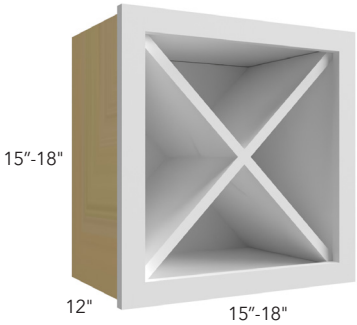

WINE RACK

ITEM	I	H / K
WR15X15	425	425
WR18X18	510	510

- *Finished Interior*
- *1-½" Framed cabinet construction*
- *Exterior has 3/4" recess from face frame (all around)*
- *Interior has 1/4" recess from face frame (all around)*

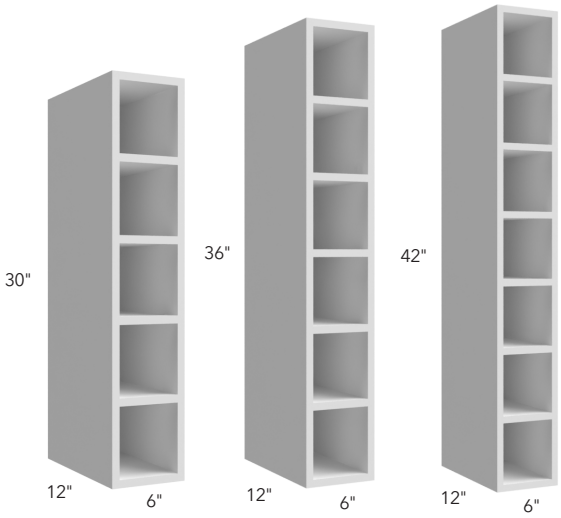

WINE CUBE

ITEM	I	H / K
WC0630	360	360
WC0636	405	405
WC0642	455	455

- *Veneer plywood with edge banding*
- *Finished Interior & Exterior*
- *Frameless construction*

Wood Hoods

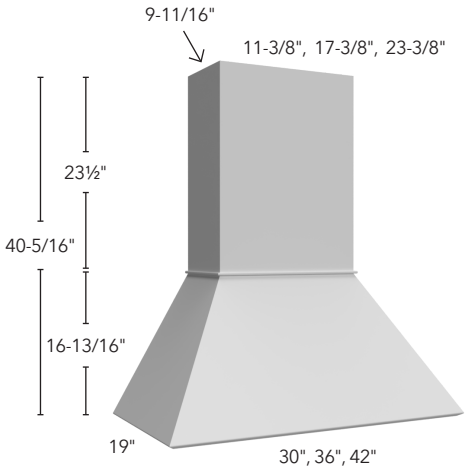

EURO HOOD

ITEM	I	H / K
RHE30	3500	3500
RHE36	3745	3745
RHE42	3945	3945

- *Includes Stainless Steel Hood Liner (liner is user removable)*
- *Chimney is trimmable on site (refer to assembly and installation instructions for more details)*
- *Modifications are not available for this item*
- *Liner specifications found on pg. 18*

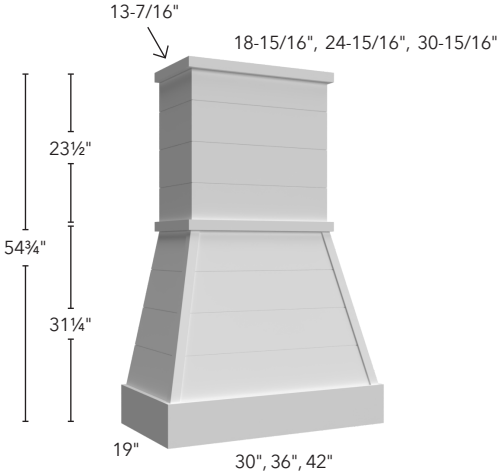

FARMHOUSE HOOD

ITEM	I	H / K
RHF30	5120	5120
RHF36	5430	5430
RHF42	5745	5745

- *Includes Stainless Steel Hood Liner (liner is to be installed after hood is mounted on wall)*
- *Chimney is trimmable on site (refer to assembly and installation instructions for more details)*
- *Modifications are not available for this item*
- *Liner specifications found on pg. 19*

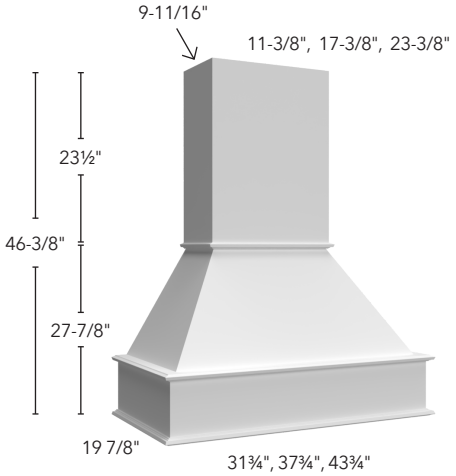

SIGNATURE HOOD

ITEM	I	H / K
RHS30	3740	3740
RHS36	3950	3950
RHS42	4240	4240

- *Includes Full Interior Stainless Steel Liner (liner is user removable)*
- *Chimney is trimmable on site (refer to assembly and installation instructions for more details)*
- *Modifications are not available for this item*
- *Liner specifications found on pg. 19*

Wood Hoods

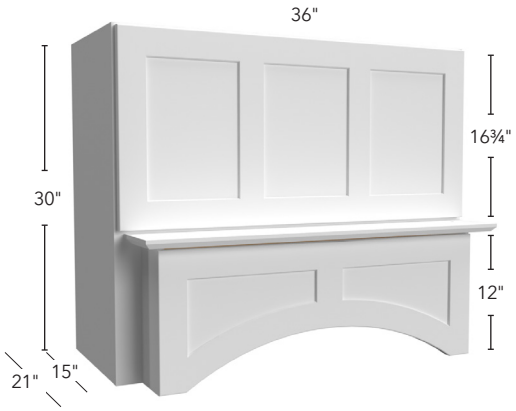

3 PANEL ARCHED HOOD

ITEM	I	H / K
RHA363021*	3240	3900

- *Arched valance profile coordinates with that of door style*
- *Includes Full Interior Stainless Steel Hood Liner (liner is user removable)*
- *Top panel lifts up*
- *Sides are flush finished ends*
- *Crown to be installed above cabinet, not on face frame*
- *Hood depth can be increased or decreased (contact Custom Quotes for pricing)*
- *Liner specifications found on pg. 20*

* *Not available in Luna*

4 PANEL ARCHED HOOD

ITEM	I	H / K
RHA423021*	3360	4025
RHA483021*	3485	4165

- *Not available in Luna*
- *Arched valance profile coordinates with that of door style*
- *Includes Full Interior Stainless Steel Hood Liner (liner is user removable)*
- *Top panel lifts up*
- *Sides are flush finished ends*
- *Crown to be installed above cabinet, not on face frame*
- *Hood depth can be increased or decreased (contact Custom Quotes for pricing)*
- *Liner specifications found on pg. 20*

* *Not available in Luna*

Hood / Liner Specifications

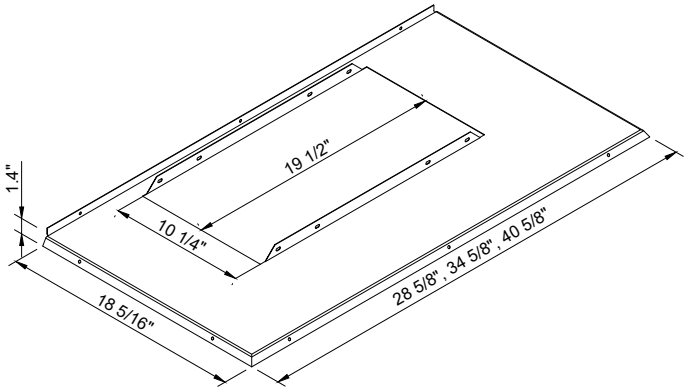

EURO HOOD LINER

ITEM
HOOD LINER-RHE30
HOOD LINER-RHE36
HOOD LINER-RHE42

- *Liner is included as a standard on Allure Euro Hoods (hood will ship with liner pre-installed)*
- *Blower is **NOT** included, must be purchased separately by other*
- *Blowers that fit this liner:*
  Broan NuTone / Model NSPM250
  Broan / Model PM300
  Broan NuTone / Model NSPM390
  Broan / Model PM400SS
  Broan / Model PM500SS Power Pack
  Best / Model P195P1M52SB6
  XO / Model XOI21SMUA
  XO / Model XOI22SC
  Zephyr / Model AK8400BS
  Zephyr / Model AK8400BS290

MODELS LISTED ARE RECOMMENDATIONS ONLY; Fabuwood takes no responsibility for the selection of blower. Dealer is responsible for specifying and recommended to consult with an appliance dealer to select compatible blower options based on their individual cooking appliance needs and manufacturer specifications.

CONSTRUCTION DETAILS:

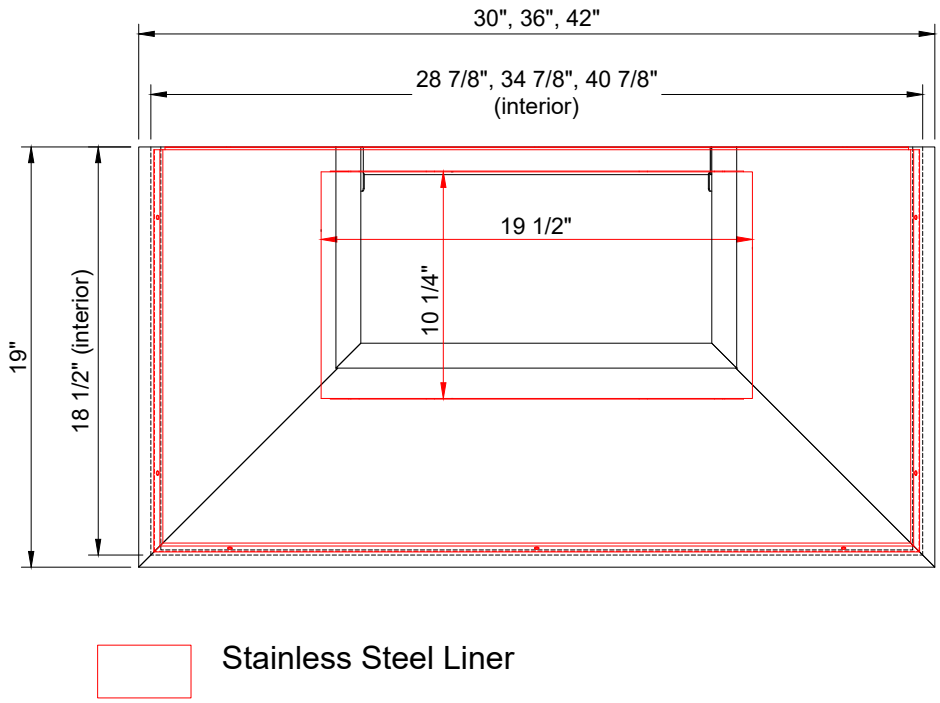

Hood / Liner Specifications

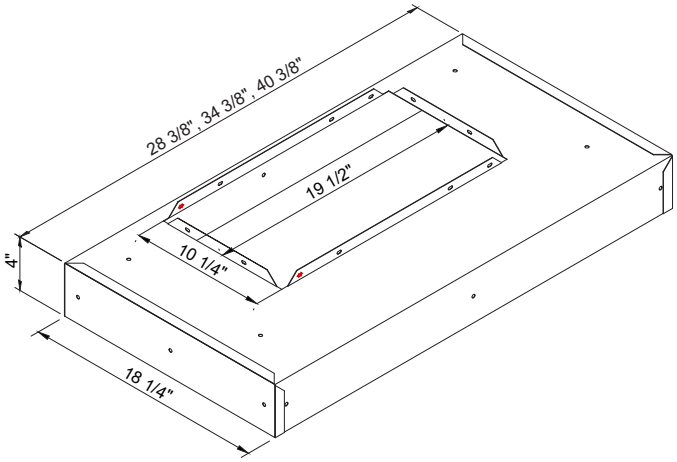

FARMHOUSE/SIGNATURE HOOD LINER

ITEM
HOOD LINER-RHA/F/S30
HOOD LINER-RHA/F/S36
HOOD LINER-RHA/F/S42

- *Liner is included as a standard on Allure Farmhouse & Signature Hoods (hood will ship with liner to be installed on site)*
- *Blower is **NOT** included, must be purchased separately by other*
- *Blowers that fit this liner:*
  Broan NuTone / Model NSPM250
  Broan / Model PM300
  Broan NuTone / Model NSPM390
  Broan / Model PM400SS
  Broan / Model PM500SS Power Pack
  Best / Model P195P1M52SB6
  XO / Model XOI21SMUA
  XO / Model XOI22SC
  Zephyr / Model AK8400BS
  Zephyr / Model AK8400BS290

MODELS LISTED ARE RECOMMENDATIONS ONLY; Fabuwood takes no responsibility for the selection of blower. Dealer is responsible for specifying and recommended to consult with an appliance dealer to select compatible blower options based on their individual cooking appliance needs and manufacturer specifications.

FARMHOUSE CONSTRUCTION DETAILS:

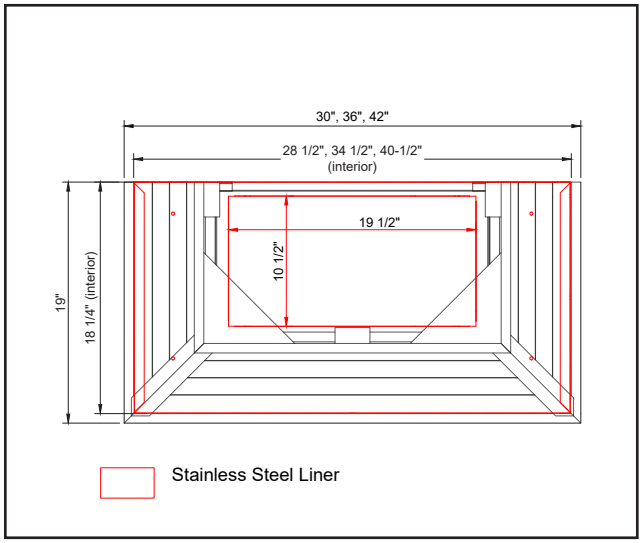

SIGNATURE CONSTRUCTION DETAILS:

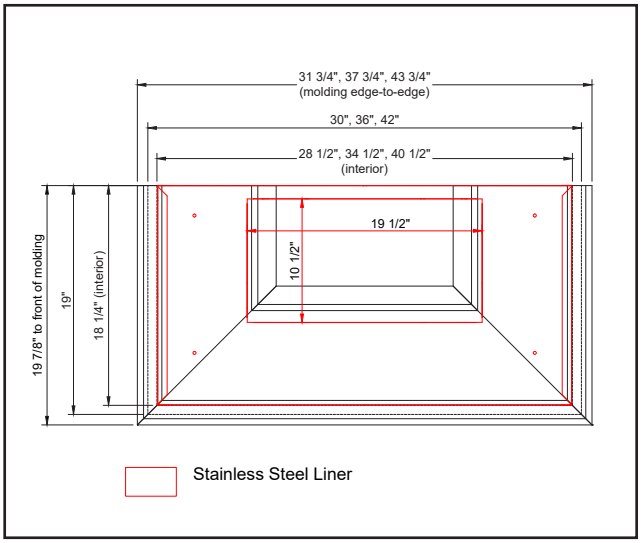

Hood / Liner Specifications

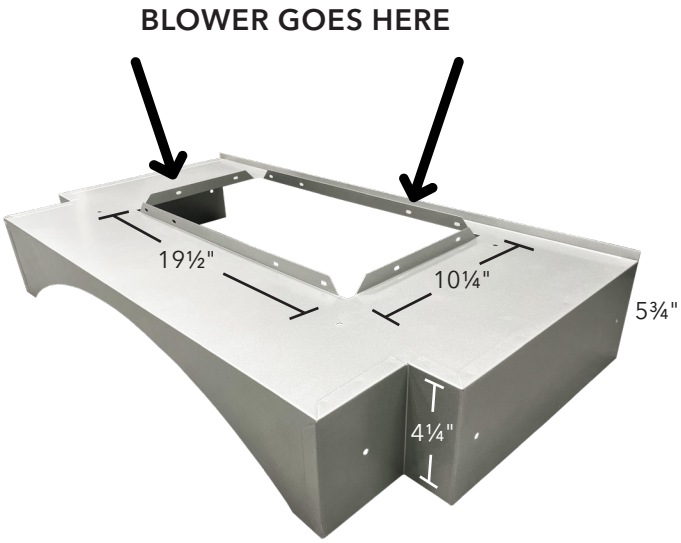

ARCHED HOOD LINER

ITEM
HOOD LINER-RHA363021
HOOD LINER-RHA423021
HOOD LINER-RHA483021

- *Liner is included as a standard on Allure Arched Hoods (hood will ship with liner preinstalled)*
- *Blower is **NOT** included, must be purchased separately by other*
- *Blowers that fit this liner:*
  Broan NuTone / Model NSPM250
  Broan / Model PM300
  Broan NuTone / Model NSPM390
  Broan / Model PM400SS
  Broan / Model PM500SS Power Pack
  Best / Model P195P1M52SB6
  XO / Model XOI21SMUA
  XO / Model XOI22SC
  Zephyr / Model AK8400BS
  Zephyr / Model AK8400BS290

MODELS LISTED ARE RECOMMENDATIONS ONLY; Fabuwood takes no responsibility for the selection of blower. Dealer is responsible for specifying and recommended to consult with an appliance dealer to select compatible blower options based on their individual cooking appliance needs and manufacturer specifications.

CONSTRUCTION DETAILS:

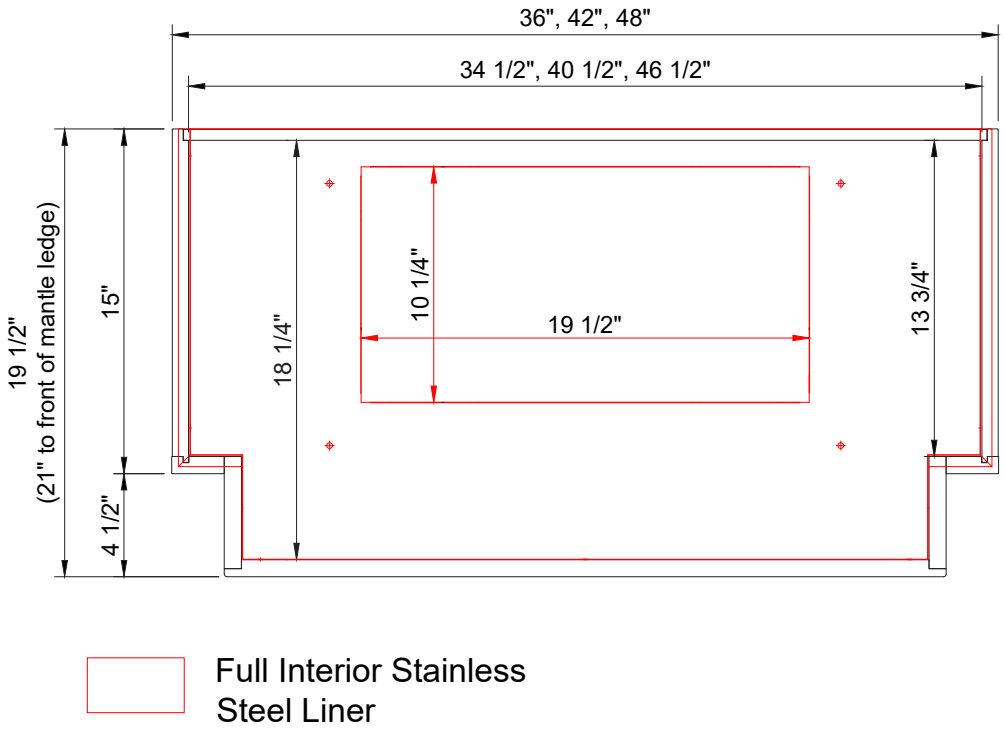

Base Cabinets

FULL HEIGHT SINGLE DOOR

ITEM	I	H / K
B09FD*	360	440
B12FD	435	540
B15FD	455	575
B18FD	495	615
B21FD	530	660

- ** Does not have a shelf*
- ** B09 accessories available on pg. 40*
- *Trash Can available on pg. 38*
- *Peninsula modification available on pg. XII*
- *Roll Out available on pg. 39*

FULL HEIGHT DOUBLE DOOR

ITEM	I	H / K
B24FD	535	690
B27FD	585	750
B30FD	615	790
B33FD	625	805
B36FD	655	835
B39FD	700	905

- *Peninsula modification available on pg. XII*
- *Roll Out available on pg. 39*

SINGLE DOOR

ITEM	I	H / K
B12	480	585
B15	500	620
B18	540	660
B21	575	705

- ** Has a full height door without a drawer and shelf*
- ** B09 accessories available on pg. 40*
- *Trash Can available on pg. 38*
- *Cutlery Divider available on pg. 49*
- *Peninsula modification available on pg. XII*
- *Roll Out available on pg. 39*

Base Cabinets

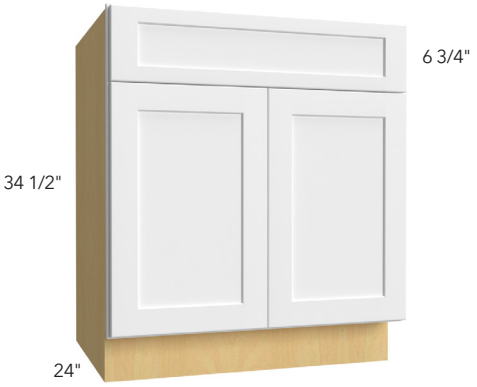

DOUBLE DOOR

ITEM	I	H / K
B24	630	775
B27	690	845
B30	735	905

- *Cutlery Divider available on pg. 49*
- *Peninsula modification available on pg. XII*
- *Roll Out available on pg. 39*

DOUBLE DOOR & DRAWER

ITEM	I	H / K
B33	845	1040
B36	900	1095
B39*	955	1170
B42*	1010	1245
B48*	1090	1375

* *Has 3" center stile*
- *Cutlery Divider available on pg. 46*
- *Roll Out available on pg. 39*

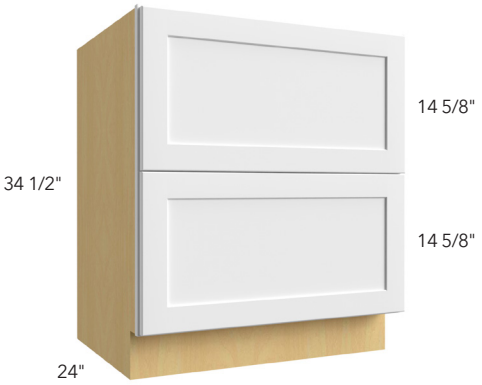

2 DRAWER

ITEM	I	H / K
DB30-2	1115	1300
DB36-2	1365	1595

Base Cabinets

3 DRAWER

ITEM	I	H / K
DB12	825	960
DB15	840	980
DB18	865	1010
DB21	895	1045
DB24	940	1105
DB27	1035	1205
DB30	1130	1320
DB33	1275	1495
DB36	1380	1615

- *Cutlery Divider available on pg. 49*

4 DRAWER

ITEM	I	H / K
DB15-4	1045	1275
DB18-4	1070	1315
DB21-4	1110	1360

- *Cutlery Divider available on pg. 46*

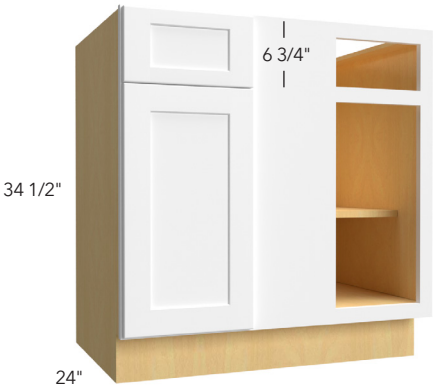

BLIND

ITEM	I	H / K
BLB36/39	820	1005
BLB39/42	915	1125
BLB42/45	1025	1250
BLB48/51	1025	1380

- *Must use filler on adjacent wall (not supplied)*
- *Measurements are rounded off to closest ⅛"*

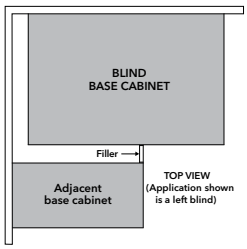

	Act.	Min.	Max	Door	Stile	Open
BLB36/39	27"	36"	41½"	9¾"	9½"	7¼"
BLB39/42	33"	39"	45"	12¼"	10¼"	9¾"
BLB42/45	39"	42"	48"	15⅜"	10¼"	12¾"
BLB48/51	48"	48"	51"	21¼"	7⅜"	18¾"

Base Cabinets

DIAGONAL SINK FRONT

ITEM	I	H / K
DSF36*	195	285
DSFL36**	130	130

** DSF36 The sink front has a 17" face dimension*
*** DSFL36 The floor must be ordered separately*

- *Uses ⅜" overlay hinge*
- *Tilt Out available on pg. 45*

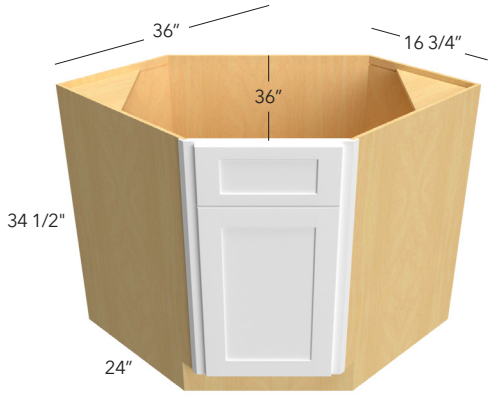

DIAGONAL SINK

ITEM	I	H / K
DSB36*	825	1010
DSB36FD	825	1010

** Tilt Out available on pg. 45*

- *Uses ⅜" overlay hinge*

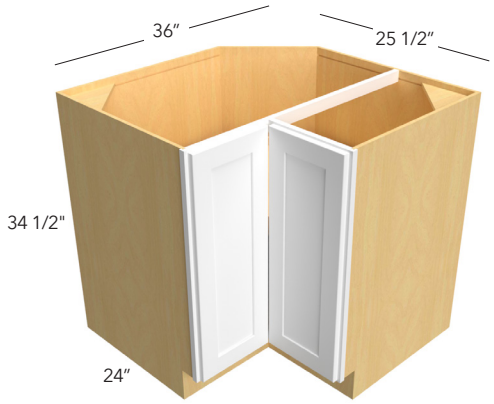

EASY REACH

ITEM	I	H / K
ERB36	1135	1390

- *Center shelf is adjustable*
- *Soft close hinge not available*

Base Cabinets

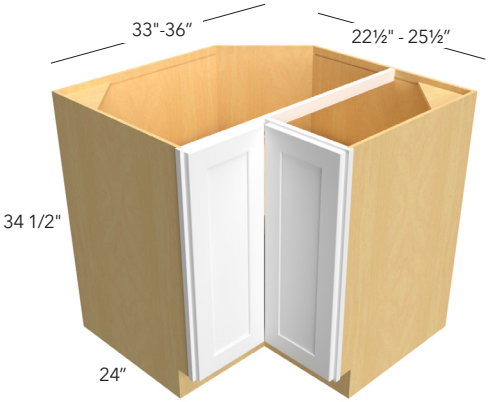

LAZY SUSAN

ITEM	I	H / K
LSB33	1380	1700
LSB36	1395	1715

- *Both wooden Lazy Susan trays rotate independently*
- *Center tray is mounted on 18mm (¾") adjustable shelf*
- *Soft close hinge not available*

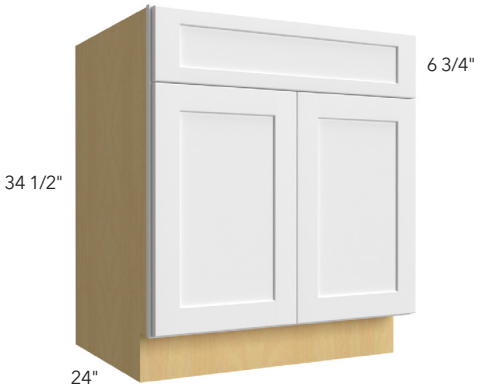

SINK

ITEM	I	H / K
SB24	535	690
SB27	585	750
SB30	615	790
SB33*	625	805
SB36*	655	835
SB39* ♦	700	905
SB42* ♦	760	975

* *Has two drawer fronts*
- *Tilt Out available on pg. 30*

♦ *Has 3" center stile*

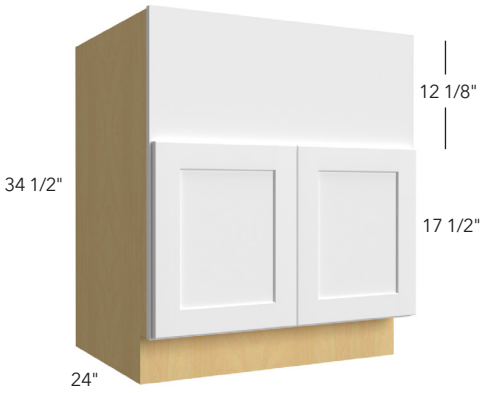

FARM SINK

ITEM	I	H / K
FS30	1350	1350
FS33	1370	1370
FS36	1385	1385

- *Cut opening on job site*
- *Frame has a full closed top panel*
- *Maximum **cutout** height 12"*
- *Maximum **cutout** width 1-1/2" less than the cabinet size*

Note: To avoid damage please apply extra care when cutting the front panel.

Specialty Base Cabinets

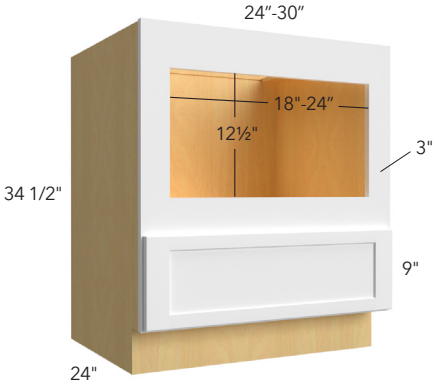

MICROWAVE

ITEM	I	H / K
BMC24	820	975
BMC30	925	1135

- *3" Wide rails face frame to be trimmed on site,*
- *Minimum Width opening 18" - 24"*
- *Maximum **cut out** width 22-1/2" - 28-1/2"*
- *Minimum Height opening 12-1/2"*
- *Maximum **cut out** height is 18-3/4"H*
- *Maximum **overall** trim kit height 21"*

Note: To avoid damage to the frame & side panels, please apply extra care when cutting the front panel.

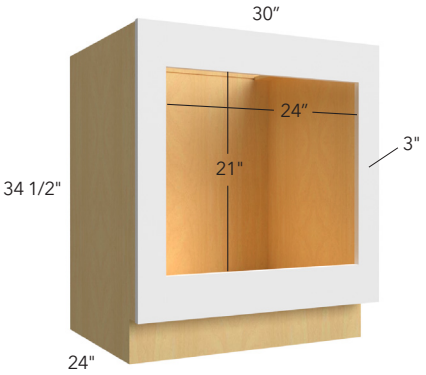

OVEN

ITEM	I	H / K
BOC30	1000	1000

- *3" Wide rails face frame to be trimmed on site,*
- *Minimum Width opening 24"*
- *Maximum **cut out** width 28-1/2"*
- *Minimum Height opening 21"*
- *Maximum **cut out** height is 28"*
- *Maximum **overall** oven height 29-3/4"*

Note: To avoid damage to the frame & side panels, please apply extra care when cutting the front panel.

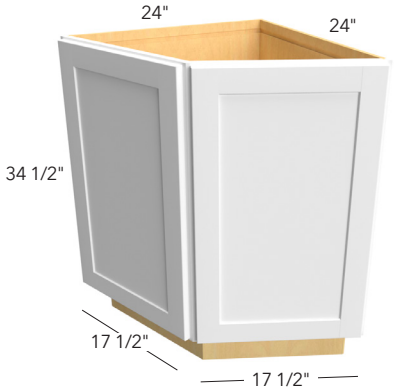

RETURN ANGLE

ITEM	I	H / K
BRA24	785	N/A

- *Adjustable shelves*
- *Available in Galaxy Frost only*

BASE TRANSITIONAL RIGHT SHOWN

TRANSITIONAL

ITEM	I	H / K
BTL12	555	675
BTR12	555	675

- *Cabinet exposed side comes pre-finished with near-flush finished end.*
- *Cabinet unexposed side comes flush and is not able to have a loose skin or applied finished end. If Interior side needs to be finished, please reach out to Customer Service to have a quote for this modification.*

Tall Pantry Cabinets

SINGLE DOOR

ITEM	I	H / K
TP152484	1200	1545
TP152490	1260	1615
TP152496	1315	1695
TP182484	1410	1730
TP182490	1480	1815
TP182496	1540	1900

- *21" deep shelves*
- *84" high - 5 shelves*
- *90" & 96" high - 6 shelves*
- *Roll Out Drawer available on pg. 39*

DOUBLE DOOR

ITEM	I	H / K
TP242484	1700	2080
TP242490	1780	2190
TP242496	1870	2295
TP302484	1975	2420
TP302490	2200	2700
TP302496	2425	2985

- *21" deep shelves*
- *84" high - 5 shelves*
- *90" & 96" high - 6 shelves*
- *Roll Out Drawer available on pg. 39*

Oven Cabinets

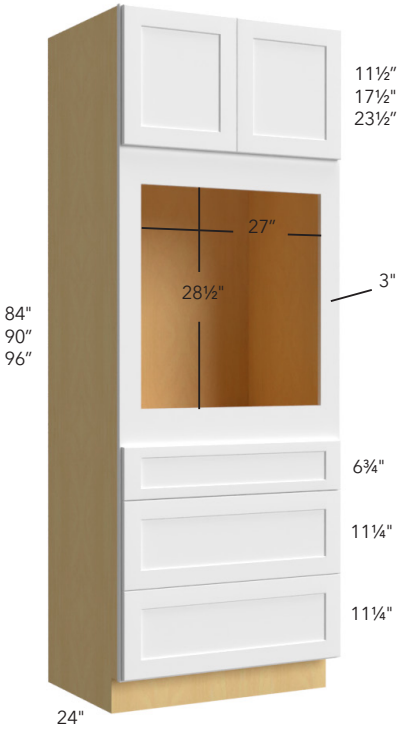

OVEN CABINET SINGLE WITH 3 DRAWERS

ITEM	I	H / K
OC3384S	2955	3620
OC3390S	3090	3800
OC3396S*	3230	3970

* *Has one shelf in top cabinet.*

- *3" Wide rails face frame to be trimmed on site*

When using a Single Oven:

- *Wide rails face frame to be trimmed on side*
- *Minimum Width opening 27"*
- *Maximum **cut out** width 31"*
- *Minimum Height opening 28 ½""*
- *Maximum **cut out** height is 37"*
- *Maximum **overall** oven Height 37 ½"*

Full panel face frame to be trimmed on site (not by Fabuwood).

Note: To avoid damage to the frame & side panels, please apply extra care when cutting the front panel.

SPECIFICATION FOR OVEN CABINET

Tall Oven Cabinets come with single fixed shelf above top drawer.
Fixed shelf will be located above the uppermost drawer; location is based on the selected configurations: Single
Frame is to be trimmed on site to accommodate configuration & appliance needs.

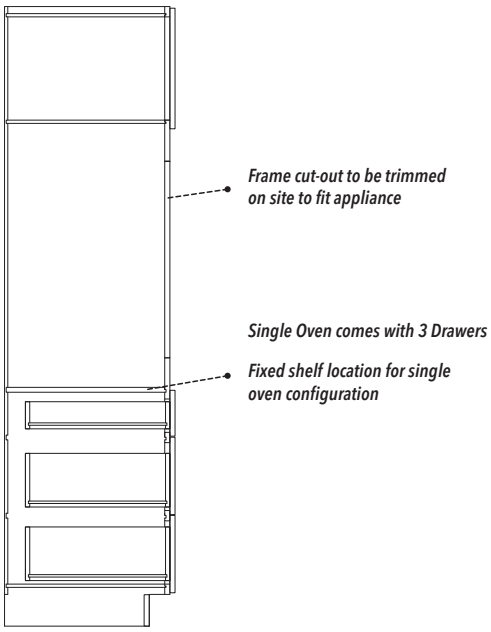

Oven Cabinets

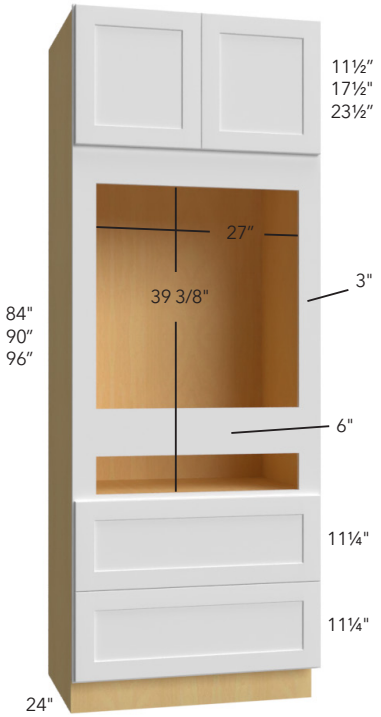

OVEN CABINET COMBO WITH 2 DRAWERS

ITEM	I	H / K
OC3384C	2820	3455
OC3390C	2950	3625
OC3396C*	3085	3790

* *Has one shelf in top cabinet.*

- *3" Wide rails face frame to be trimmed on site*

When using a Combo Oven:

- *Wide rails face frame to be trimmed on side*
- *Minimum Width opening 27"*
- *Maximum **cut out** width 31"*
- *Minimum **cut out** height 39 3/8"*
- *Maximum **cut out** height is 44"*
- *Maximum **overall** oven Height 44 5/8"*

When using two appliances:

- *Will need to insert a filler and fixed shelf to support top appliance, filler and shelf to be purchased separately*

Full panel face frame to be trimmed on site (not by Fabuwood).

Note: To avoid damage to the frame & side panels, please apply extra care when cutting the front panel.

SPECIFICATION FOR OVEN CABINET

Tall Oven Cabinets come with single fixed shelf above top drawer.
Fixed shelf will be located above the uppermost drawer; location is based on the selected configurations: Combo
Frame is to be trimmed on site to accommodate configuration & appliance needs.

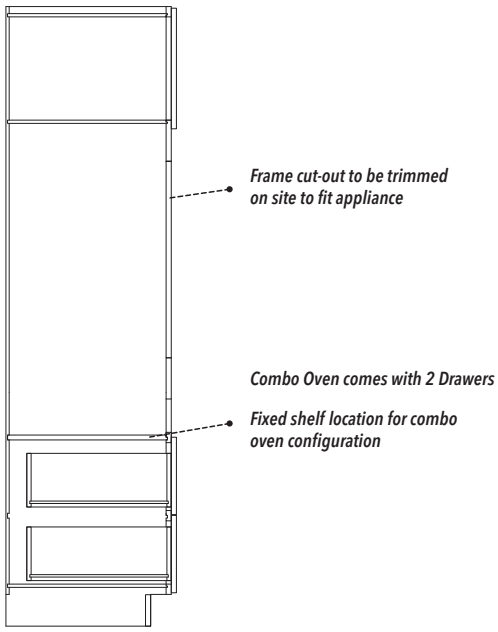

Oven Cabinets

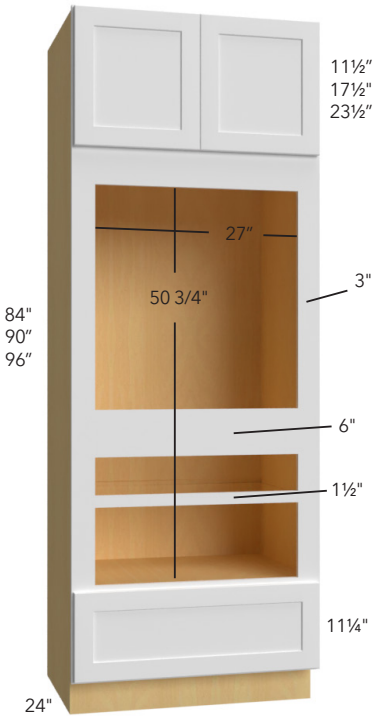

OVEN CABINET DOUBLE WITH 1 DRAWER

ITEM	I	H / K
OC3384D	2685	3290
OC3390D	2810	3455
OC3396D*	2940	3610

* *Has one shelf in top cabinet.*

- *3" Wide rails face frame to be trimmed on site*

When using a Double Oven:

- *Wide rails face frame to be trimmed on side*
- *Minimum Width opening 27"*
- *Maximum cut out width 31"*
- *Minimum cut out height is 50 ¾"*
- *Maximum cut out height is 55 ½"*
- *Maximum overall oven Height 56"*

When using two appliances:
Will need to insert a filler and fixed shelf to support top appliance, filler and shelf to be purchased separately

Full panel face frame to be trimmed on site (not by Fabuwood).

Note: To avoid damage to the frame & side panels, please apply extra care when cutting the front panel.

SPECIFICATION FOR OVEN CABINET

Tall Oven Cabinets come with single fixed shelf above top drawer.
Fixed shelf will be located above the uppermost drawer; location is based on the selected configurations: Double
Frame is to be trimmed on site to accommodate configuration & appliance needs.

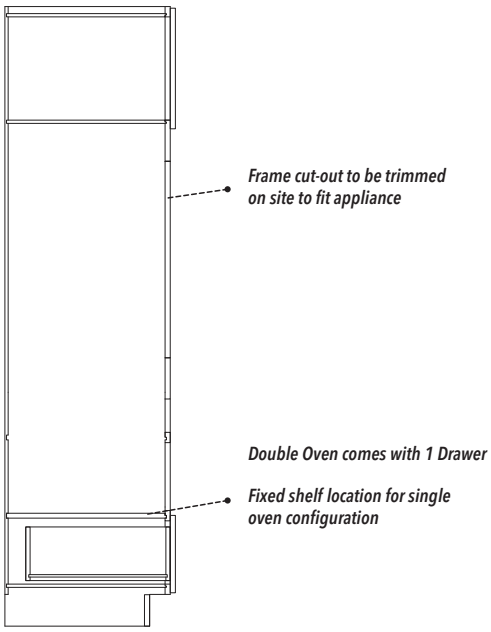

Vanities

FULL HEIGHT SINGLE DOOR VANITY BASE

ITEM	I	H / K
VB12FD	435	540
VB15FD	455	575

- *Shelf depth: 15"*

FULL HEIGHT DOUBLE DOOR VANITY BASE

ITEM	I	H / K
VB24FD	580	710
VB27FD	600	735
VB30FD	615	760
VB33FD	645	785
VB36FD	655	800

- *Shelf depth: 15"*

VANITY BASE

ITEM	I	H / K
VB12-34	480	585
VB15-34	500	620

- *2" clearance between drawer and back panel*
- *Shelf depth: 15"*

Vanities

VANITY DRAWER BASE

ITEM	I	H / K
VDB12-34	800	980
VDB15-34	840	1035
VDB18-34	895	1090

- *2" clearance between drawer and back panel*

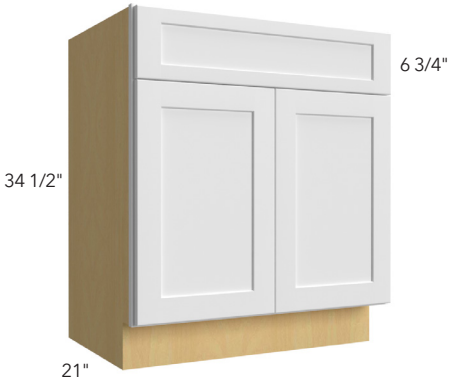

VANITY SINK BASE

ITEM	I	H / K
VSB24-34	580	710
VSB27-34	600	735
VSB30-34	615	760

VANITY SINK BASE

ITEM	I	H / K
VSB33-34	645	785
VSB36-34	655	800

Vanities

VSD30DR SHOWN

VANITY SINK & DRAWER COMBO

ITEM	I	H / K
VSD30DR	1010	1240
VSD30DL	1010	1240

- *Not available in Nexus*

Need to select drawer on right or left side, cabinet can't be reversed R/L after assembled.

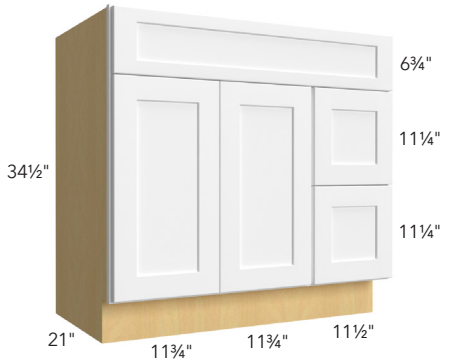

VSD36DR SHOWN

VANITY SINK & DRAWER COMBO

ITEM	I	H / K
VSD36DR	1050	1290
VSD36DL	1050	1290

Need to select drawer on right or left side, cabinet can't be reversed R/L after assembled.

VANITY SINK & DRAWER COMBO

ITEM	I	H / K
VSD42	1165	1425

Vanities

VANITY SINK & DRAWER COMBO

ITEM	I	H / K
VSD48	1305	1600

VANITY SINK & DRAWER COMBO

ITEM	I	H / K
VSD60 SINGLE	1605	1970

VANITY SINK & DRAWER COMBO

ITEM	I	H / K
VSD60 DOUBLE	1400	1720

File Drawer / Vanities

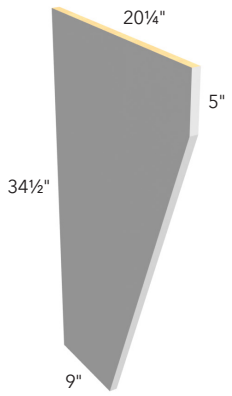

VANITY DESK LEG

ITEM	I	H / K
VDL	155	N/A

- *Plywood veneer ¾" thick*
- *Front matching color edge banding*
- *Only available in Frost*

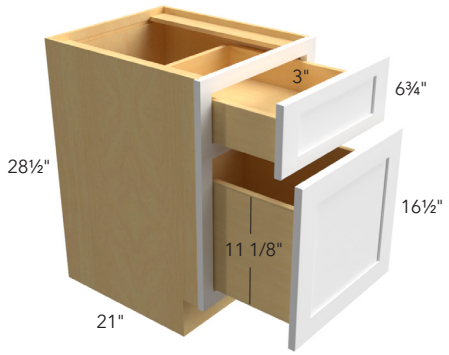

FILE DRAWER BASE

ITEM	I	H / K
FD18	740	910

- *Cabinet height is 28½"*
- *File rack not included*

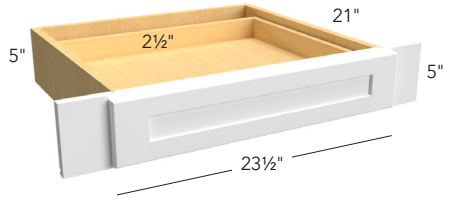

KNEE DRAWER

ITEM	I	H / K
KD30	225	270

- *Can be trimmed up to 3" on both sides*
- *Blum soft close undermount*
- *Recessed drawer front*

ADA Cabinets

* All ADA cabinets have a 4½" toe kick

Discontinuation Notice: ADA Cabinets have been discontinued from Allure. Limited quantities available while supplies last.

SINGLE DOOR BASE

ITEM	I	H / K
ADA-B12	550	675
ADA-B15	575	715
ADA-B18	625	765

- *Available in Galaxy Espresso, Fusion Dove, and Fusion Nickel*
- *Cutlery Divider available on pg. 46*
- *Peninsula modification available on pg. XII*
- *Roll Out Drawer available on pg. 39*

DOUBLE DOOR BASE

ITEM	I	H / K
ADA-B24	715	895
ADA-B30	845	1040

- *Available in Galaxy Espresso, Fusion Dove, and Fusion Nickel*
- *Cutlery Divider available on pg. 46*
- *Peninsula modification available on pg. XII*
- *Roll Out Drawer available on pg. 39*

DOUBLE DOOR & DRAWER BASE

ITEM	I	H / K
ADA-B36	1035	1260

- *Available in Galaxy Espresso, Fusion Dove, and Fusion Nickel*
- *Peninsula Modification available on pg. XII*
- *Cutlery Divider available on pg. 49*
- *Roll Out Drawer available on pg. 39*

DRAWER BASE

ITEM	I	H / K
ADA-DB15	965	1130
ADA-DB24	1080	1270

- *Available in Galaxy Espresso, Fusion Dove, and Fusion Nickel*
- *Cutlery Divider available on pg. 46*

ADA Cabinets

* All ADA cabinets have a 4½" toe kick

Discontinuation Notice: ADA Cabinets have been discontinued from Allure. Limited quantities available while supplies last.

SINK BASE - REMOVABLE FRONT

ITEM	I	H / K
ADA-SB30-R	795	1030
ADA-SB36-R	850	1090

- *Available in Galaxy Espresso, Fusion Dove, and Fusion Nickel*
- *Match interior*

VANITY DRAWER BASE

ITEM	I	H / K
ADA-VDB15	965	1190

- *Available in Galaxy Espresso, Fusion Dove, and Fusion Nickel*
- *2" clearance between drawer and back panel*

VANITY SINK BASE - REMOVABLE FRONT

ITEM	I	H / K
ADA-VSB30-R	795	980
ADA-VSB36-R	850	1045

- *Available in Galaxy Espresso, Fusion Dove, and Fusion Nickel*
- *Match interior*

Waste Solutions / Accessories

TC15

TRASH CAN

ITEM	LIST PRICE
TC15*	560
TC18	825
TC21	890

- *Cabinet not included, cabinet must be ordered separately*
- *Full extension slides (not soft-close)*
- *2 - 35 qt. cans included*
- *Not for ADA cabinet use*

* *Single 35 qt. can + one bags bin*

TC15

TRASH CAN (BLUM SLIDES)

ITEM	LIST PRICE
TC15 BLUM*	1040
TC18 BLUM	1120
TC21 BLUM	1235
TCV15 BLUM♦	945

- *Tandem plus Blumotion full extension concealed drawer runners*
- *Cabinet not included, cabinet must be ordered separately*
- *2 - 35 qt. cans included*
- *Not for ADA cabinet use*

* *Single 35 qt. can + one bags bin*

♦ *Smaller depth for vanity cabinets*

TC15FHD BLUM

TRASH CAN FULL HEIGHT DOOR (BLUM SLIDES)

ITEM	LIST PRICE
TC15FHD BLUM*	1040
TC21FHD BLUM	1235

- *Tandem plus Blumotion full extension concealed drawer runners*
- *Cabinet not included, cabinet must be ordered separately*
- *2 - 50 qt. can included*
- *Not for ADA cabinet use*
- *FULL-DOORS modification is required*

* *Single 50 qt. can + one bags bin*

Base / Accessories

ROLL OUT (PARTIAL EXTENSION BLUM SLIDES)

ITEM	LIST PRICE
ROD-B15 BLUM E	245
ROD-B18 BLUM E	260
ROD-B21 BLUM E	265
ROD-B24 BLUM E	280
ROD-B27 BLUM E	285
ROD-B30 BLUM E	300
ROD-B33 BLUM E	305
ROD-B36 BLUM E	315

- *Cabinet not included*
- *Price is for a single Roll Out drawer*
- *Blumotion partial extension concealed drawer runners*
- *Drawers are adjustable*
- *Can be used for pantries*

ROLL OUT (FULL EXTENSION BLUM SLIDES)

ITEM	LIST PRICE
ROD-B15 BLUM H	315
ROD-B18 BLUM H	330
ROD-B21 BLUM H	335
ROD-B24 BLUM H	350
ROD-B27 BLUM H	355
ROD-B30 BLUM H	365
ROD-B33 BLUM H	370
ROD-B36 BLUM H	375

- *Cabinet not included*
- *Price is for a single Roll Out drawer*
- *Blumotion full extension concealed drawer runners*
- *Drawers are adjustable*
- *Can be used for pantries*

Base / Accessories

TWO-TIER COOKWARE ORGANIZER

ITEM	LIST PRICE
CWO-B18 BLUM	1435
CWO-B24 BLUM	1660

- *Cabinet not included*
- *Full-extension Blum slides*
- *Pegboard bottoms*
- *4 Press-in pegs included*

3" TOWEL BAR PULL OUT

ITEM	LIST PRICE
TBPO-BF3	575

- *Filler & Overlay Filler are required and need to be ordered separately*
- *2 Towel bars*
- *Single static shelf with chrome wire accents*
- *UV coated maple wood*
- *Installed on site*
- *Installed between two cabinets*
- *Full-extension, ball-bearing slides with soft-close*

SPICE PULL OUT BASE 9"

ITEM	LIST PRICE
SPO-B9*	725
SPO-B9 BLUM	1075

- *Cabinet not included, cabinet must be ordered separately*
- *Chrome rails*
- *Adjustable shelves*
- *UV coated maple wood*
- *Not for ADA cabinet use*

* *Full extension ball-bearing slides (not soft-close)*

Base / Accessories

9"UTENSIL PULL OUT

ITEM	LIST PRICE
UPO-B9 BLUM	1175

- *Cabinet not included, cabinet must be ordered separately*
- *Chrome rails*
- *Adjustable shelves*
- *UV coated maple wood*
- *Not for ADA cabinet use*
- *Features Blumotion soft-close drawer slides*

UTENSIL & KNIFE PULL OUT

ITEM	LIST PRICE
UKBPO-B12 BLUM	1615

- *Cabinet not included, cabinet must be ordered separately*
- *Designed for 12" full height base cabinet*
- *Knife block features flex rod technology that adjust to securely hold knives*
- *Chrome rails*
- *Adjustable top shelf*
- *2 qt. removable stainless steel bin included*
- *4 flexible plastic cutting mats included*
- *UV coated maple wood*
- *Not for ADA cabinet use*
- *Features Blumotion soft-close drawer slides*

9" TRAY DIVIDER PULL OUT

ITEM	LIST PRICE
TDPO-B9 BLUM	895

- *Cabinet not included, cabinet must be ordered separately*
- *UV coated maple wood*
- *Not for ADA cabinet use*
- *Features Blumotion soft-close drawer slides*

Base & Wall / Accessories

SPICE PULL OUT BASE FILLER

ITEM	LIST PRICE
SPO-BF3*	445
SPO-BF3 BLUM	780
SPO-BF6*	505
SPO-BF6 BLUM	925

- *Filler & Overlay Filler are required and need to be ordered separately*
- *Chrome rails*
- *Adjustable shelves*
- *UV coated maple wood*
- *Installed on site*
- *Installed between two cabinets*
- *Not for ADA cabinet use*
- *Wall filler 30" high is recommended instead of a base filler, requires to build toe kick separately*

* *Full extension ball-bearing slides (not soft-close)*

SPICE PULLOUT WALL FILLER

ITEM	LIST PRICE
SPO-WF330	505
SPO-WF336	540
SPO-WF342	575
SPO-WF630	580
SPO-WF636	625
SPO-WF642	665

- *Filler & Overlay Filler are required and need to be ordered separately*
- *Chrome rails*
- *Full extension ball-bearing slides (BLUM soft-close slides not available)*
- *Adjustable shelves*
- *UV coated maple wood*
- *Installed on site*
- *Installed between two cabinets*

Wall / Accessories

LAZY SUSAN

	ITEM	LIST PRICE
PLASTIC	LSP24 30	300
PLASTIC	LSP24 36/42	455
WOOD	LSW24 30	570
WOOD	LSW24 36/42	890
WOOD	LSW27 30*	725
WOOD	LSW27 36/42*	1135

- *Adjustable metal post*
- *42" lazy susan has 3 trays*
- *Prepared for installation at job site*
- *42" poles can be cut to fit 36" high cabinet*

* *20" trays*

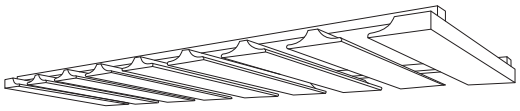

STEMWARE RACK

ITEM	LIST PRICE
STEMWARE 30	535
STEMWARE 36	565

- *Comes unfinished. Product finished per order. May have extended ETA.*

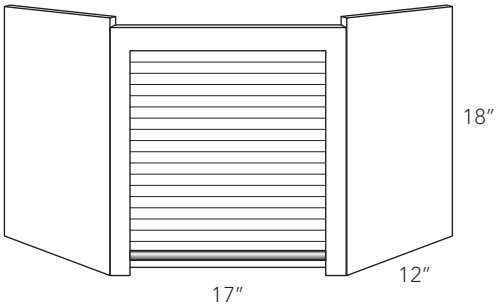

CORNER APPLIANCE GARAGE

ITEM	LIST PRICE
APPLIANCE GARAGE	1010

- *Comes unfinished. Product finished per order. May have extended ETA*
- *Designed to be installed under a diagonal corner wall 24".*

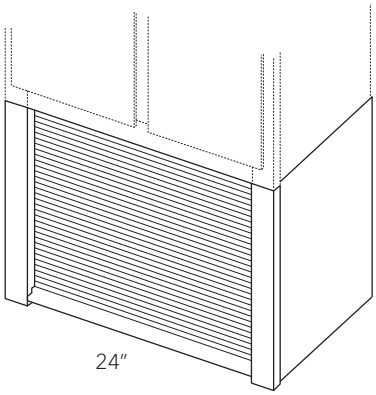

STRAIGHT APPLIANCE GARAGE

ITEM	LIST PRICE
APPLIANCE GARAGE 24"	1295

- *Product finished per order. May have extended ETA*
- *Designed to be placed under a 24" wide wall cabinet.*
- *Stiles are 2" wide*

Wall / Accessories

FLOATING SHELF

ITEM	LIST PRICE
FLS24	445
FLS30	490
FLS36	575
FLS42	605
FLS48	635
FLS54	835

- *Includes hanging bracket & mounting hardware*
- *Dimensions:*
  Width: 24", 30", 36", 42", 48", 54"
  Height - 2½"
  Depth - 10"
- *Floating shelves are finished at the time of order placement and may extend the ETA on the order*

WALNUT FLOATING SHELF

ITEM	LIST PRICE
FLS24 WALNUT	575
FLS30 WALNUT	635
FLS36 WALNUT	705
FLS42 WALNUT	770
FLS48 WALNUT	835
FLS54 WALNUT	975

- *Includes hanging bracket & mounting hardware*
- *Dimensions:*
  Width: 24", 30", 36"
  Height - 2½"
  Depth - 10"

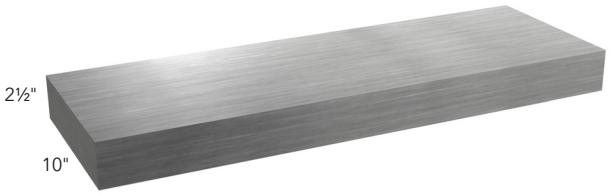

STAINLESS STEEL FLOATING SHELF

ITEM	LIST PRICE
SSFLS24	580
SSFLS30	630
SSFLS36	740

- *Includes hanging bracket & mounting hardware*
- *Dimensions:*
  Width: 24", 30", 36"
  Height - 2½"
  Depth - 10"

Sink / Accessories

TILT OUT

ITEM	LIST PRICE
TILTOUT 11"	210
TILTOUT 14"	210
TILTOUT 24"	210

- *White plastic tray*

Drawer / Accessories

TRIMMABLE CUTLERY INSERT

ITEM	LIST PRICE
CD-S	270
CD-L	360

- *UV coated maple wood*
- *⅜" dividers*
- *2½" interior height*
- *⅜" plywood bottom*
- *Includes installation*

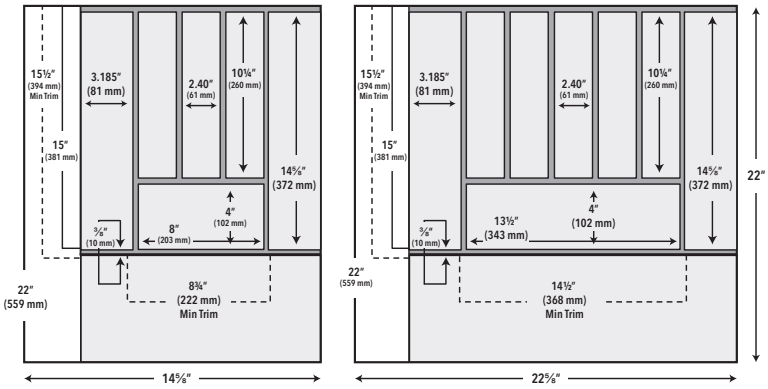

WIDE TRIMMABLE CUTLERY INSERT

ITEM	LIST PRICE
CD-XL	700

- *Designed for 36" or smaller base cabinet drawers*
- *UV coated maple wood*
- *⅜" dividers*
- *2½" interior height*
- *⅜" plywood bottom*
- *Includes installation*

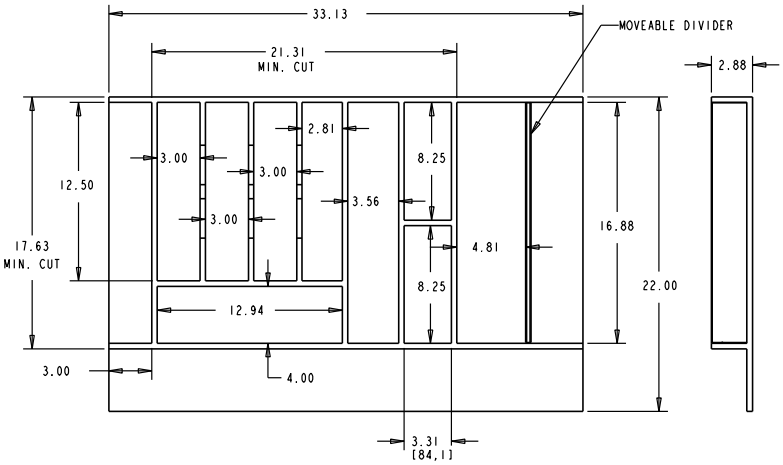

Drawer / Accessories

TRIMMABLE UTENSIL INSERT

ITEM	LIST PRICE
UT-15/24	300

- *To fit 15" - 24" drawer*
- *Minimum cut width 8-1/2" W, Max 18-1/2" W. In a 24"W cabinet, will have extra room.*
- *UV coated maple wood*
- *⅜" dividers*
- *2½" interior height*
- *⅜" plywood bottom*
- *Includes installation*

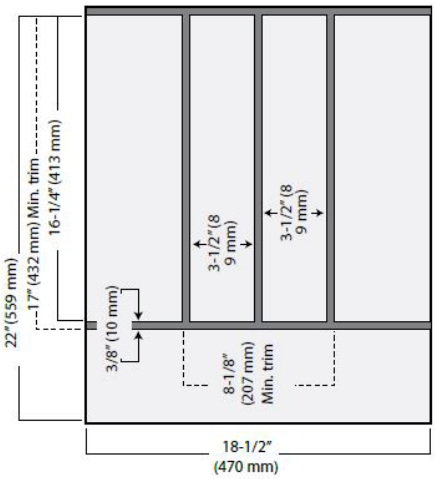

Drawer / Accessories

TIERED DEEP DRAWER

ITEM	LIST PRICE
DTD-DB30 BLUM	1180
DTD-DB36 BLUM	1250

- *For DB30 & DB36 only*
- *Replaces the original drawer box of cabinet*
- *UV coated maple wood*
- *Drawer front not included*
- *3 drawer compartments*
- *Blumotion full extension concealed drawer runners*

CUTTING BOARD & KNIFE DRAWER

ITEM	LIST PRICE
CBKD-B18 BLUM	895

- *For 18" cabinet drawer only*
- *Replaces the original drawer box of cabinet*
- *UV coated maple wood*
- *Up to 4 compartments and built-in knife organizer*
- *1 wooden cutting board*
- *Blumotion full extension concealed drawer runners*

CHARGING DRAWER

ITEM	LIST PRICE
CHD-B18 BLUM	1485

- *For 18" cabinet drawer only*
- *Replaces the original drawer box of cabinet*
- *UV coated maple wood*
- *Blumotion full extension concealed drawer runners*
- *(2) 120V plugs and (2) 201 amp USB ports*
- *Tamper resistant outlets*
- *Max current: AC: 12 amps @ 120VAC; USB 2.1 amp & 5 VDC*
- *Power cord with NEMA 5 - 15 plug*
- *Integrated cord guide to ensure safe operation*
- *Shock absorbent mat, black*
- *Overall safety of this product is determined by its end use*

Drawer / Accessories

2-TIER CUTLERY DRAWER

ITEM	LIST PRICE
DCD-15 BLUM	470
DCD-18 BLUM	570
DCD-21 BLUM	625
DCD-24 BLUM	660

- *UV coated maple wood*
- *Includes complete 3¾" high drawer box*
- *Features Blum soft-close slides*

2-TIER CUTLERY COMBO DRAWER

ITEM	LIST PRICE
DCD-30 BLUM	775
DCD-36 BLUM*	900

- *UV coated maple wood*
- *Includes complete 3¾" high drawer box*
- *Features Blum soft-close slides*

* *For DB36 only*

TRIMMABLE KNIFE DIVIDER

ITEM	LIST PRICE
DKI-18/24	280

- *UV coated maple wood*
- *Total height: 2"*
- *⅜" plywood bottom*

Vanity / Accessories

VANITY OUTLET GROOMING ORGANIZER

ITEM	LIST PRICE
VGO12FD BLUM	2085

- *Cabinet not included, cabinet must be ordered separately*
- *Designed for 12" full height cabinet*
- *2 removable stainless steel bins included*
- *2 shelves with non-skid vinyl lining and acrylic accents*
- *In-drawer receptacle with (2) 120V plugs*
- *Tamper-resistant outlets*
- *Max Current: AC: 12 amps @ 120VAC*
- *Power cord with NEMA 5 – 15 plug*
- *Integrated cord guide ensures safe operation*
- *Drawer stop prevents items from being stored "ON" inside the cabinet*
- *Its end-use determines the overall safety of this product*
- *UV coated maple wood*
- *Not for ADA cabinet use*
- *Blumotion full extension concealed drawer runners*

TRIMMABLE VANITY DRAWER ORGANIZER INSERT

ITEM	LIST PRICE
VDO	565

- *Designed for 21" or smaller vanity base drawers*
- *Fits perfectly for KD30 cabinet*
- *Anti-skid vinyl lining*
- *Up to 13 compartments*
- *2 clear acrylic lids*
- *UV coated maple wood*

VANITY APPLIANCE STORAGE RACK

ITEM	LIST PRICE
VASR-30	315

- *Designed for 30" vanity base cabinet*
- *Mounts to inside of right or left door*
- *Non-skid lining on lower level shelf*
- *(2) 1.25 qt. stainless steel bins*
- *UV coated maple wood*

Vanity / Accessories

VANITY ORGANIZER PULL OUT

ITEM	LIST PRICE
VOPO-24 BLUM	885

- *Tandem plus Blumotion full extension drawer runners*
- *Designed for 24"-30" Vanity Sink Base*
- *Reversible*
- *6 Acrylic bins included*

U-SHAPED VANITY SINK BASE PULL OUT

ITEM	LIST PRICE
UVTCPO-30 BLUM	865

- *Tandem plus Blumotion full extension drawer runners*
- *Designed for 30" Vanity Sink Base, but works great in standard depth base cabinets as well*
- *Non-skid vinyl lining*
- *4 adjustable dividers*
- *8 qt. waste container included*

Any accessories can be ordered and installed through Fabuwood

Fillers / Accessories

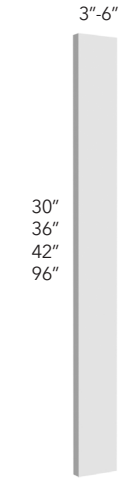

WALL & TALL

ITEM	I	H / K
WF330	34	34
WF336	45	45
WF342	54	54
WF630	63	63
WF636	86	86
WF642	100	100
TF396	106	106
TF696	200	200

- *Wall/Tall Fillers are finished on all four edges and front face*
- *Spice Pullout available on pg. 42*

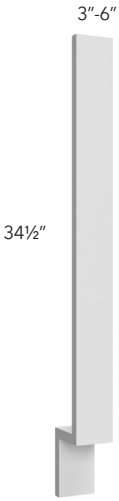

BASE

ITEM	I	H / K
BF3	43	43
BF6	79	79

- *Base Fillers are finished on all four edges of upper filler area and front face; recessed toe kick area not finished*
- *Spice Pullout available on pg. 42*

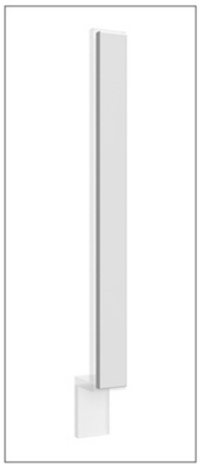

OVERLAY FILLER ON BASE FILLER SHOWN

OVERLAY

ITEM	I	H / K
OLF330*	92	92
OLF336*	105	105
OLF342*	120	120
OLF384* ♦	270	270
OLF390* ♦	290	290
OLF396* ♦	305	305
OLF630**	150	150
OLF636**	190	190
OLF642**	225	225

* *Actual width: 2½"*
** *Actual width: 5½"*
- *All four edges and front face of Overlay Filler are finished*
- *Back filler to be ordered separately*

♦ *Height is 5-1/8" less then the cabinet height*

Valances / Accessories

STRAIGHT

ITEM	I	H / K
VST96	245	245

- *Edge profile*

FUSION PROFILE | **GALAXY/LUNA PROFILE** | **IMPERIO PROFILE** | **NEXUS PROFILE** | **ONYX PROFILE**

ARCHED

ITEM	I	H / K
VAR36	115	115
VAR54	130	130

- *Edge profile*
- *Can be trimmed up to 3" on each side*

FUSION PROFILE | **GALAXY/LUNA PROFILE** | **IMPERIO PROFILE** | **NEXUS PROFILE** | **ONYX PROFILE**

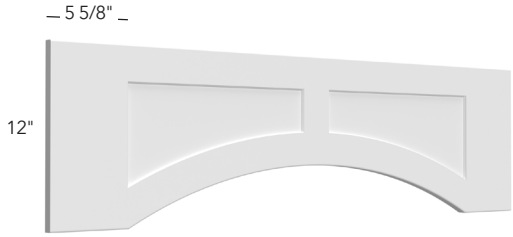

ARCHED-RECESSED PANEL

ITEM	I	H / K
VARP36	285	350
VARP42	290	355
VARP48	305	360
VARP54	310	370

- *Not available in Luna*
- *Can be trimmed up to 3" on each side*

Posts / Accessories

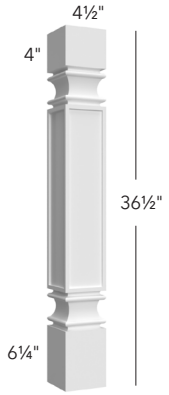

STANDARD POST

ITEM	I	H / K
SP36	565	565

- *Must trim 2" from top or bottom*

Disclaimer: Posts are handmade and may therefore feature inconsistencies in shape or form. These are in no way considered defects.

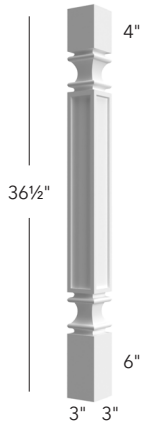

STANDARD POST

ITEM	I	H / K
SP3X3	460	460

- *Must trim 2" from top or bottom*

Disclaimer: Posts are handmade and may therefore feature inconsistencies in shape or form. These are in no way considered defects.

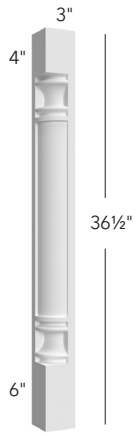

CORNER POST

ITEM	I	H / K
CP36	415	415

- *Must trim 2" from top or bottom*

Disclaimer: Posts are handmade and may therefore feature inconsistencies in shape or form. These are in no way considered defects.

Pilasters / Accessories

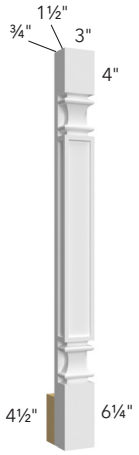

PLAIN PILASTER BASE & TALL

ITEM	I	H / K
PP-BASE*	300	300
PP-TP84	605	605
PP-TP90	620	620
PP-TP96	620	620

* *Must trim 2" from top or bottom*
- *Features a toe kick block behind the pilaster*

Disclaimer: Pilasters are handmade and may therefore feature inconsistencies in shape or form. These are in no way considered defects.

PLAIN PILASTER WALL

ITEM	I	H / K
PP-W30	260	260
PP-W36	290	290
PP-W42	320	320

Disclaimer: Pilasters are handmade and may therefore feature inconsistencies in shape or form. These are in no way considered defects.

Moldings (8') / Accessories

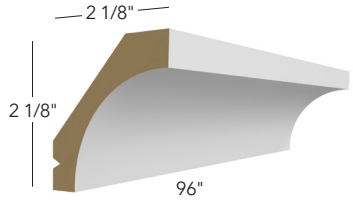

SMALL COVE

ITEM	I	H / K
CM-3	160	160

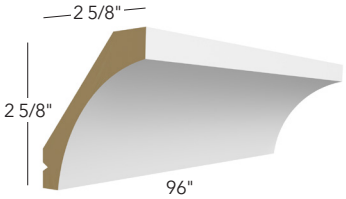

LARGE COVE

ITEM	I	H / K
CM-4	180	180

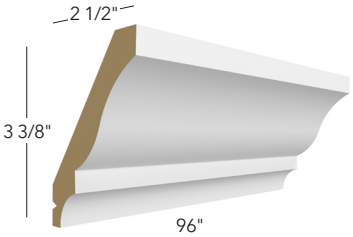

LARGE CROWN

ITEM	I	H / K
CM-6	200	200

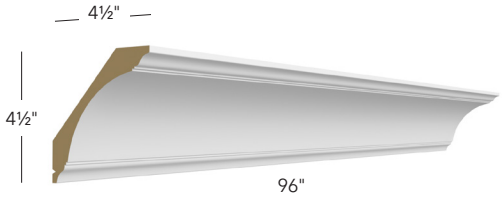

LARGE COVE CROWN

ITEM	I	H / K
CM-7	390	390

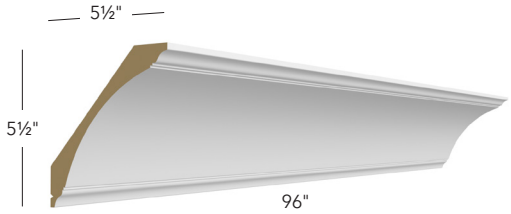

X-LARGE COVE CROWN

ITEM	I	H / K
CM-8	485	485

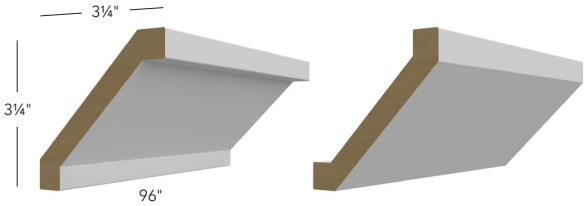

SHAKER CROWN

ITEM	I	H / K
CM-9*	N/A	200

- *Reversible molding, can be installed two ways*

* *Only available in Dove & Kona*

Moldings (8') / Accessories

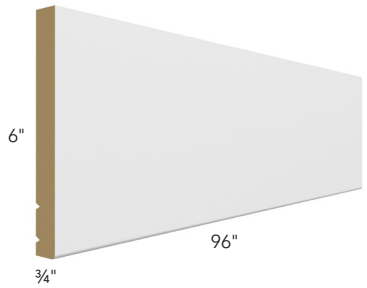

EXTENSION

ITEM	I	H / K
MEX-8	380	380

STARTER

ITEM	I	H / K
STRM-8	175	175

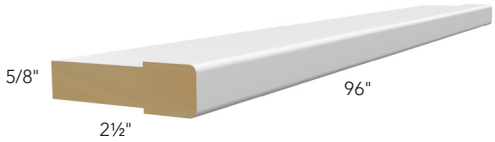

STACKING

ITEM	I	H / K
STKM-8	175	175

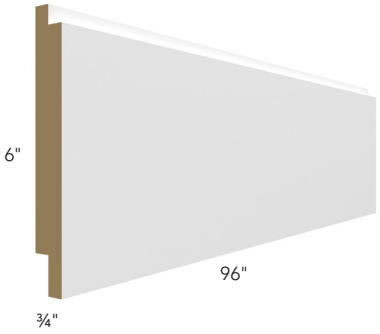

SHIP LAP

ITEM	I	H / K
SHL-8	220	220

Moldings (8') / Accessories

LIGHT RAIL

ITEM	I	H / K
LRM	195	195

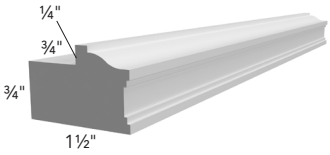

NEXUS

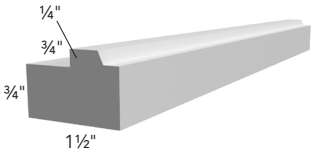

LUNA/GALAXY/ONYX

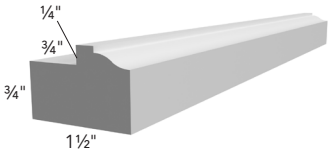

FUSION

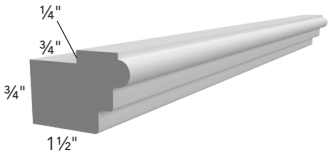

IMPERIO

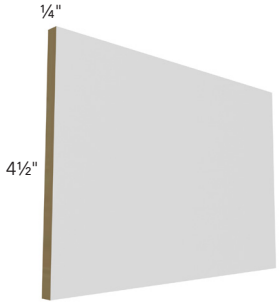

TOE KICK

ITEM	I	H / K
TK8	73	73

- *Matching color medium-density fiberboard toe kick*

BASE BOARD

ITEM	I	H / K
BBM	245	245

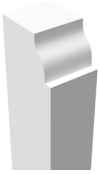

FUSION PROFILE

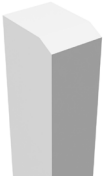

LUNA & GALAXY PROFILE

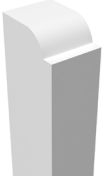

IMPERIO PROFILE

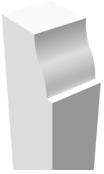

NEXUS PROFILE

ONYX PROFILE

Moldings (8') / Accessories

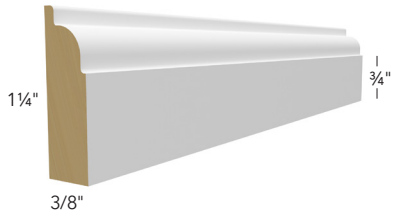

DECORATIVE SCRIBE

ITEM	I	H / K
SM8-D	54	54

SIMPLE SCRIBE

ITEM	I	H / K
SM8-S	51	51

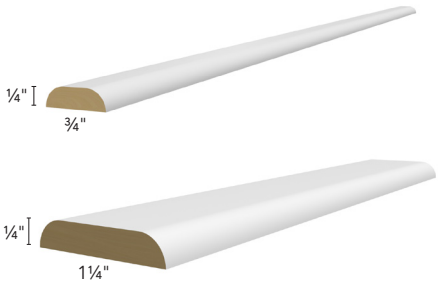

BATTEN

ITEM	I	H / K
BM3/4	58	58
BM1 1/4	76	76

Moldings (8') / Accessories

QUARTER ROUND

ITEM	I	H / K
QRM	83	83

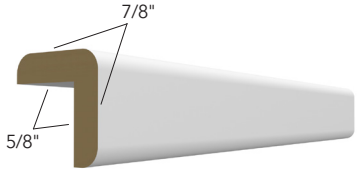

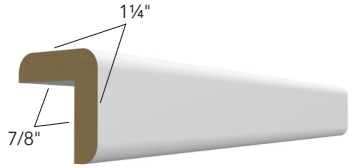

OUTSIDE CORNER

ITEM	I	H / K
OCM8	83	83
OCM8-1 1/4"	101	101

INSIDE CORNER

ITEM	I	H / K
ICM8	79	79

Corbels & Panels / Accessories

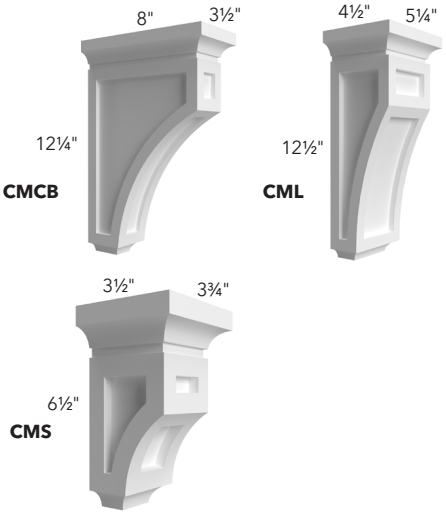

CORBEL

ITEM	I	H / K
CMCB	415	415
CML	360	360
CMS	235	235

Disclaimer: Corbels are handmade and may therefore feature inconsistencies in shape or form. These are in no way considered defects.

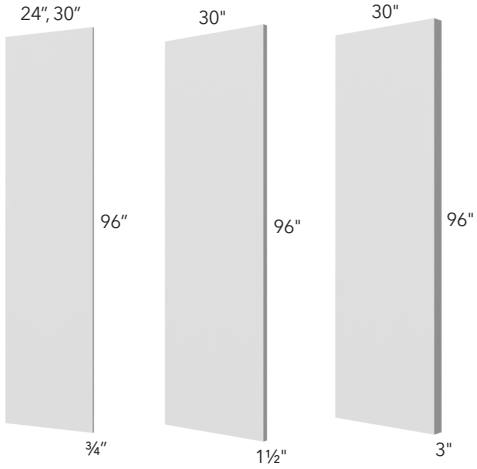

REFRIGERATOR END PANEL

ITEM	I	H / K
REP1-1/2**	330	330
REP2496*	390	390
REP3**	430	430
REP3096*	455	455
REP3096 x 1 1/2**	485	485
REP3096 x 3**	540	540

** Both 96" sides are edge-banded*

*** Sides are flush finished, (no ¼" reveal)*

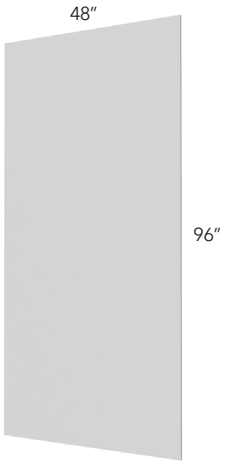

PLYWOOD

ITEM	I	H / K
PAN-1/4	350	350
PLY-1/2	595	595
PLY-3/4	690	690

- *Finished on 2 sides only*

Panels / Accessories

BPP-12
CLOSE-UP

BEADED PANEL PLANK

ITEM	I	H / K
BPP-12	165	165

- *Replaces BP4x8*
- *3/8" thick x 12 7/8"W x 47 1/2"H interlocking panel.*
- *Beads are 1 1/2" center-to-center.*
- *Visible finished portion of the panel is 12"W so when assembled together with additional planks they install in 12" increments.*
- *Trim panel to fit on site.*

Panels / Accessories

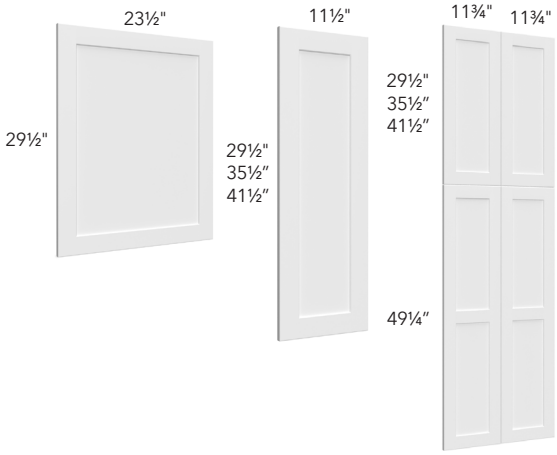

WAINSCOT PANEL

ITEM	I	H / K
WP-BASE	235	285
WP-T84*	550	670
WP-T90*	595	730
WP-T96*	670	825
WP-W15	103	120
WP-W30	120	150
WP-W36	155	190
WP-W42	185	225

- *Same profile as cabinet door*
- *Base: 23½"W x 29½"H*
- *Wall: 11½"W x 14½" / 29½" / 35½" / 41½"*
- *Tall: 11 3/4"W each door. Height matches that of pantry configuration. Tall bottom door is 49-1/4"H. Includes set of 4 doors.*

* *Can be used for 12" deep pantry*

NOTE: Wainscot Panels may come with hinge holes pre-drilled on the back of the door

8½", 11½", 14½", 17½", 20½"

DECO DOOR

ITEM	I	H / K
DD W0930 DOOR	81	100
DD W1230 DOOR	92	115
DD W1530 DOOR	115	145
DD W1830 DOOR	145	170
DD W2130 DOOR	165	200

- *Size of door is same as door on cabinet*
- *May have extended ETA*
- *Comes pre-drilled for hinges*

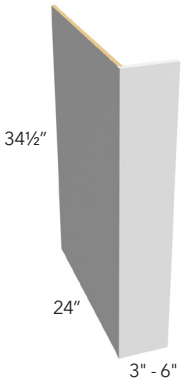

DISHWASHER RETURN END PANEL

ITEM	I	H / K
DWR3	170	170
DWR6	260	260

- *Sides are flush finished, (no ¼" reveal)*

Columns / Accessories

COLUMNS

ITEM	I	H / K
CLM-30	285	285
CLM-36	315	315
CLM-42	345	345
CLM-96	835	835
CLM-BASE	395	395

- *Base: 24" deep*
- *Tall: 27" deep*
- *Wall: 15" deep*
- *To cut column see modifications available on pg. XI*
- *Any size custom column can be created for additional charge*
- *Sides are flush finished (no 1/4" reveal)*
- *Back is unfinished*

TOUCH UP KIT

ITEM	I	H / K
TOUCH UP KIT	83	83

- *Includes stick, marker, & scraper*

PAINT SPRAY CAN

ITEM	I	H / K
PSC	60	60

- *Available in Blanc, Dove, Frost, Indigo, Linen, Nickel, Oyster & Stone painted finishes*
- *Paint Spray Can can be used for general touch-ups. Suggested Uses: Spraying the edges of molding before installation, cosmetic touch-up after installation, spraying the edges of TK8 or loose PAN-1/4 finished end skins.*
- *Note: Not intended to be used to refinish a cabinet or accessory such as trim moldings.*
- *Due to the complexity of Fabuwood finishes, Paint Spray Cans are not available for stained finishes.*

DISCLAIMER: Fabuwood takes no responsibility for improper application and/or imperfections caused by use of Paint Spray Can. Touch-ups are recommended to be completed by a qualified cabinet installer.

Notes

Copyright © 2022 by Fabuwood Cabinetry Corp.

All rights reserved.

No part of this publication may be reproduced, distributed, or transmitted in any form or by any means, including photocopying, scanning, or other electronic or mechanical methods, including online sharing, without the prior written permission of Fabuwood Cabinetry Corp.

fabuwood®

69 Blanchard Street | Newark, NJ 07105 | **T**: (201) 432-6555 | **F:** (201) 432-6055 | www.fabuwood.com